Nordic Barrel

Please read whole manual before You start.
All given measurements are in millimeters.

The Nordic Sauna

Tools required

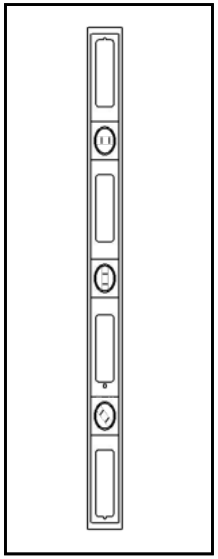

Level

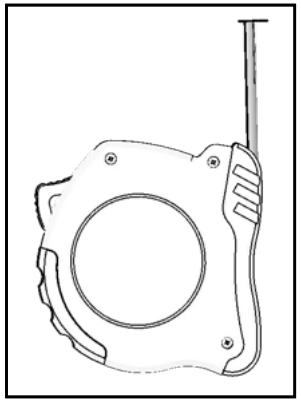

Tape measure

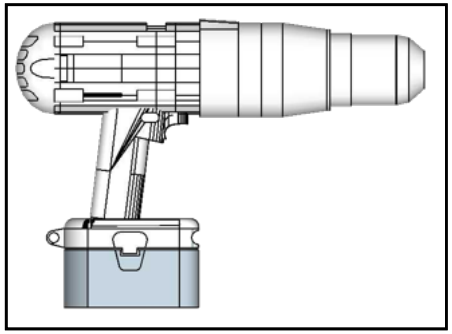

Drill

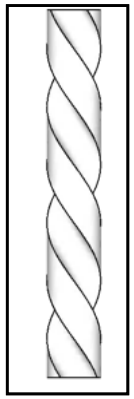

Drill bit 4Ø

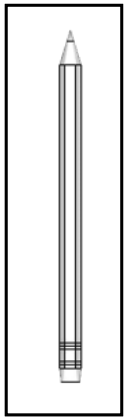

Pencil

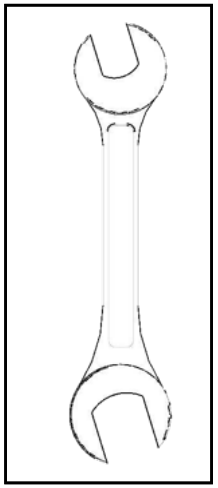

Wrench 19

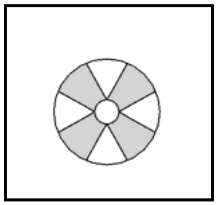

Phillips bit set

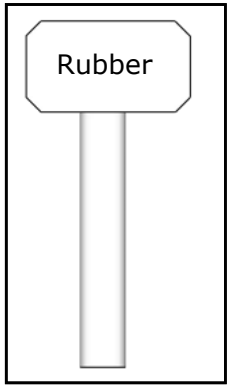

Rubber hammer

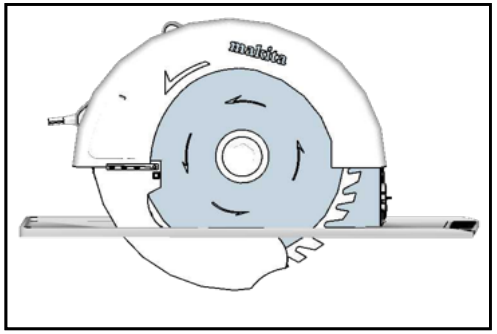

Circular saw

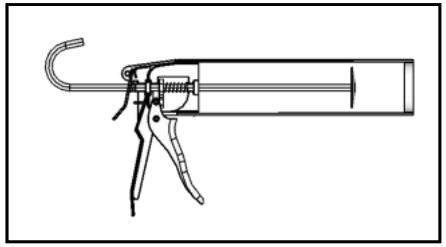

Silicone gun

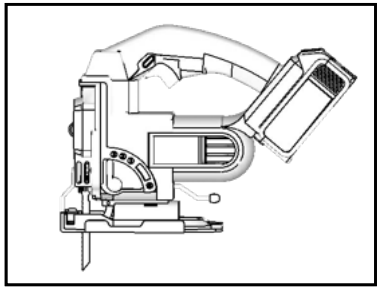

Jigsaw

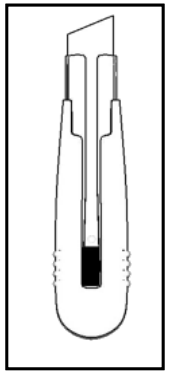

Knife

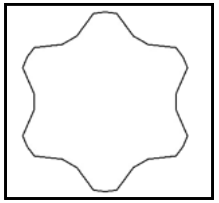

Torx bit set

Details list 1

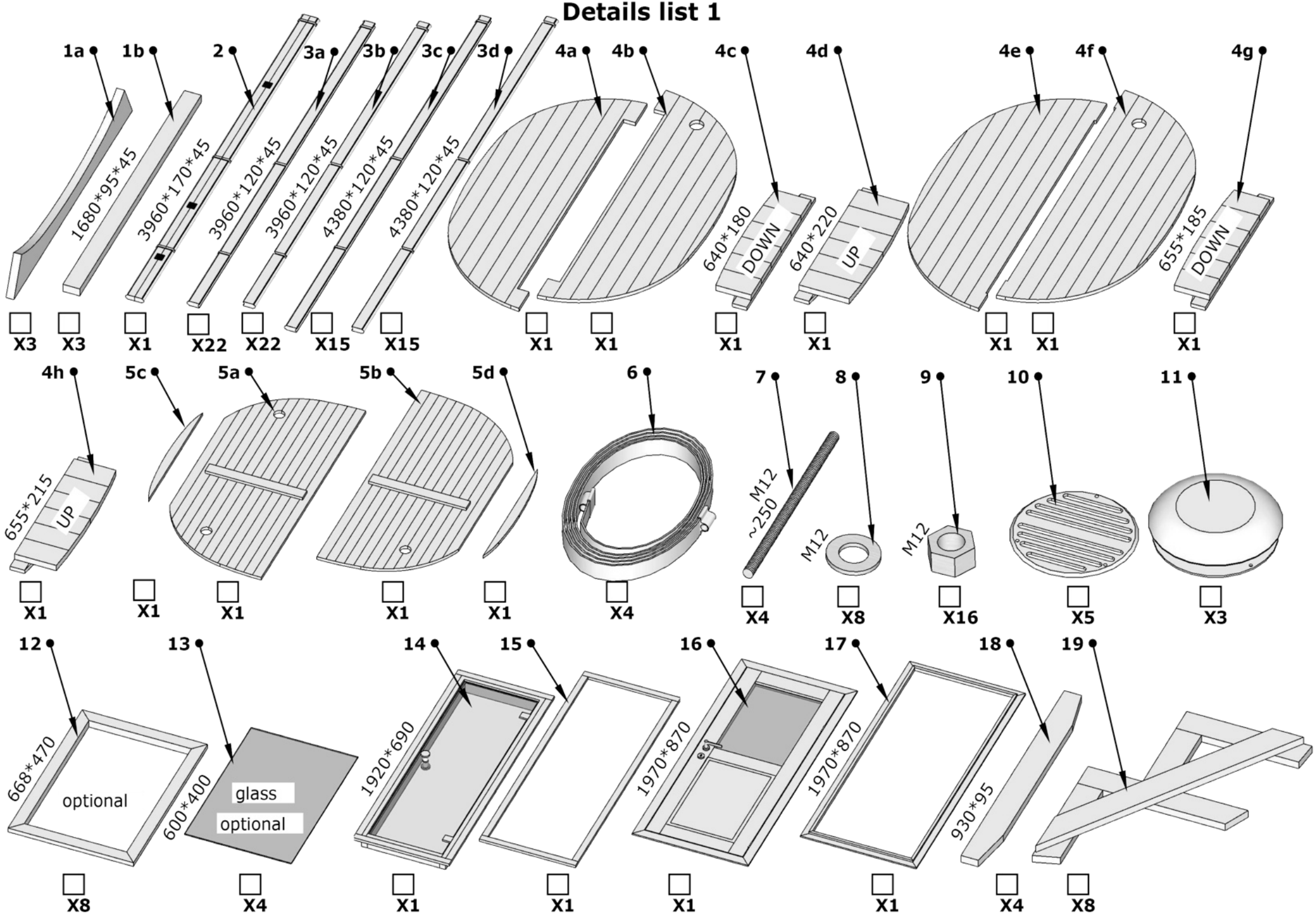

Details list 2

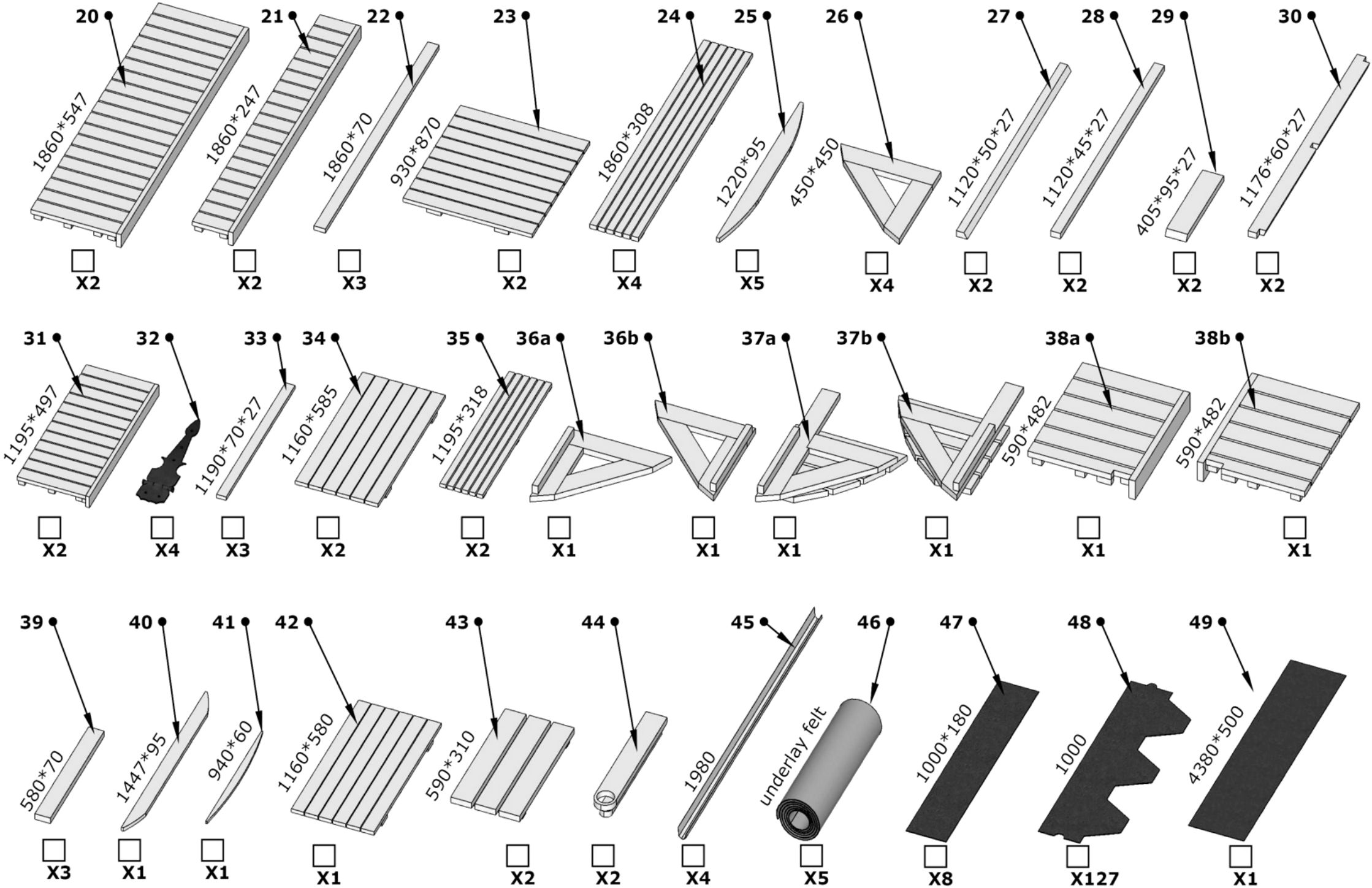

Details list 3

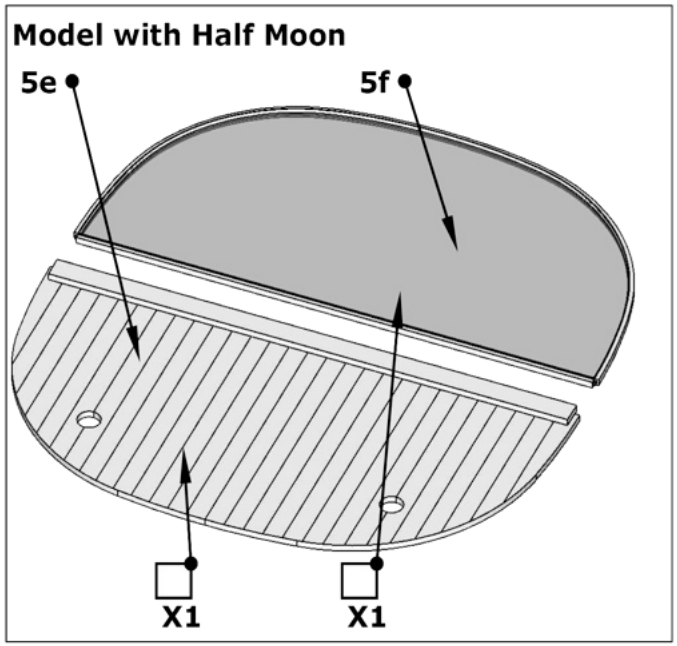

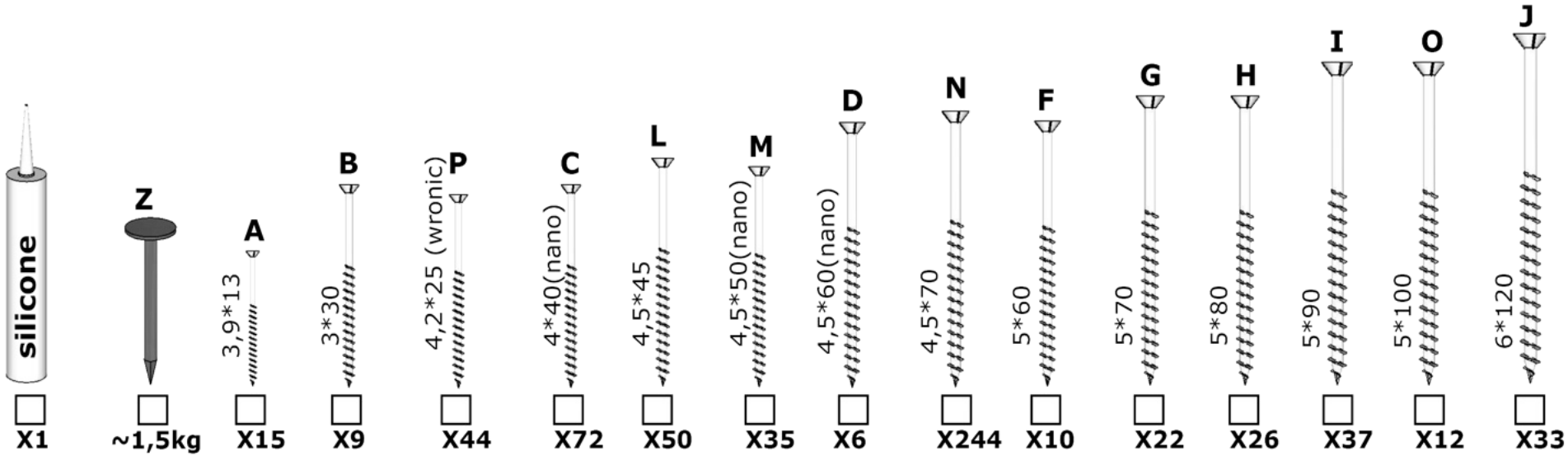

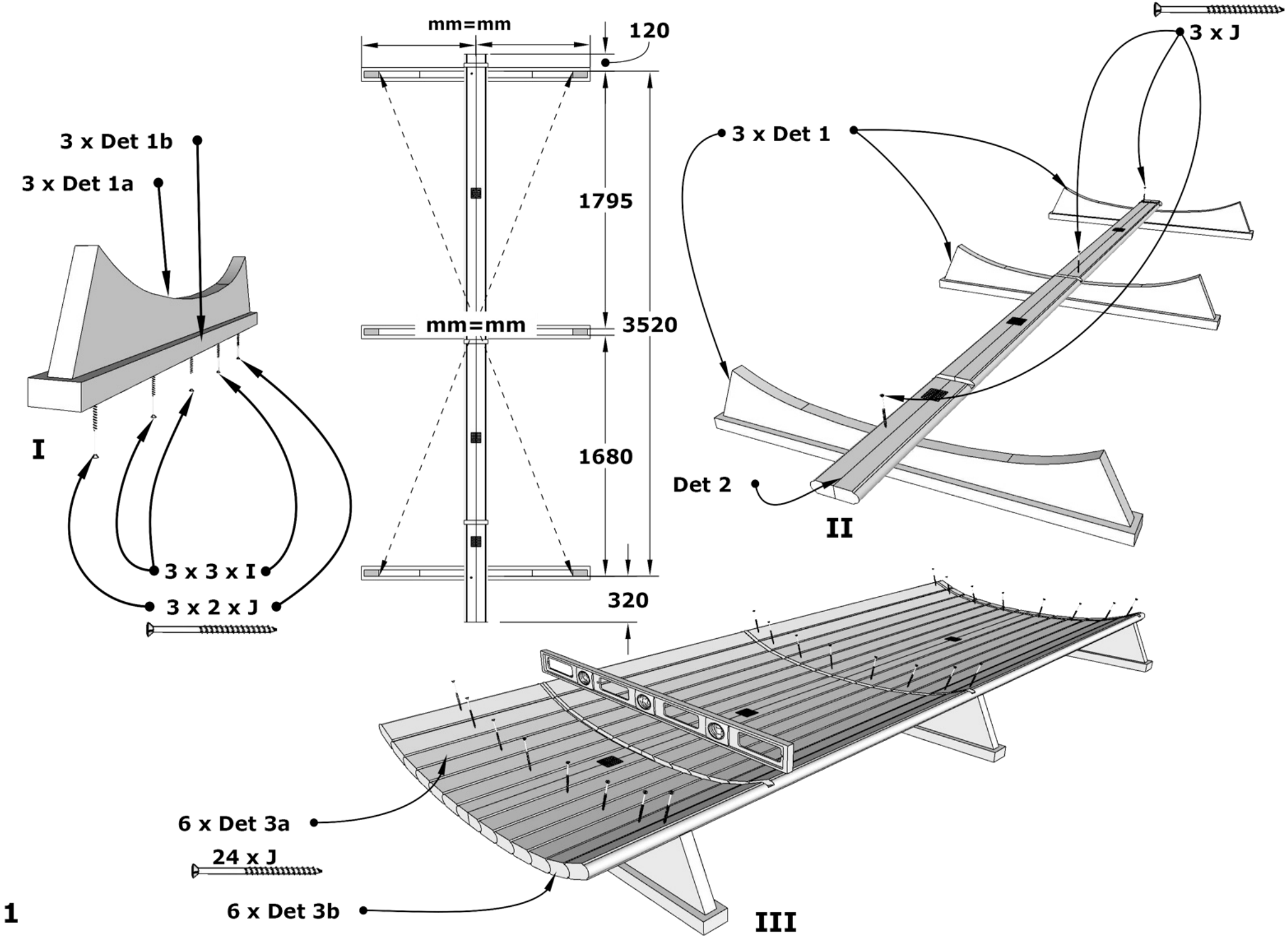
3 x Det 1b
3 x Det 1a
I
3 x 3 x I
3 x 2 x J
mm=mm
120
1795
mm=mm
3520
1680
320
3 x J
3 x Det 1
Det 2
II
6 x Det 3a
24 x J
6 x Det 3b
III

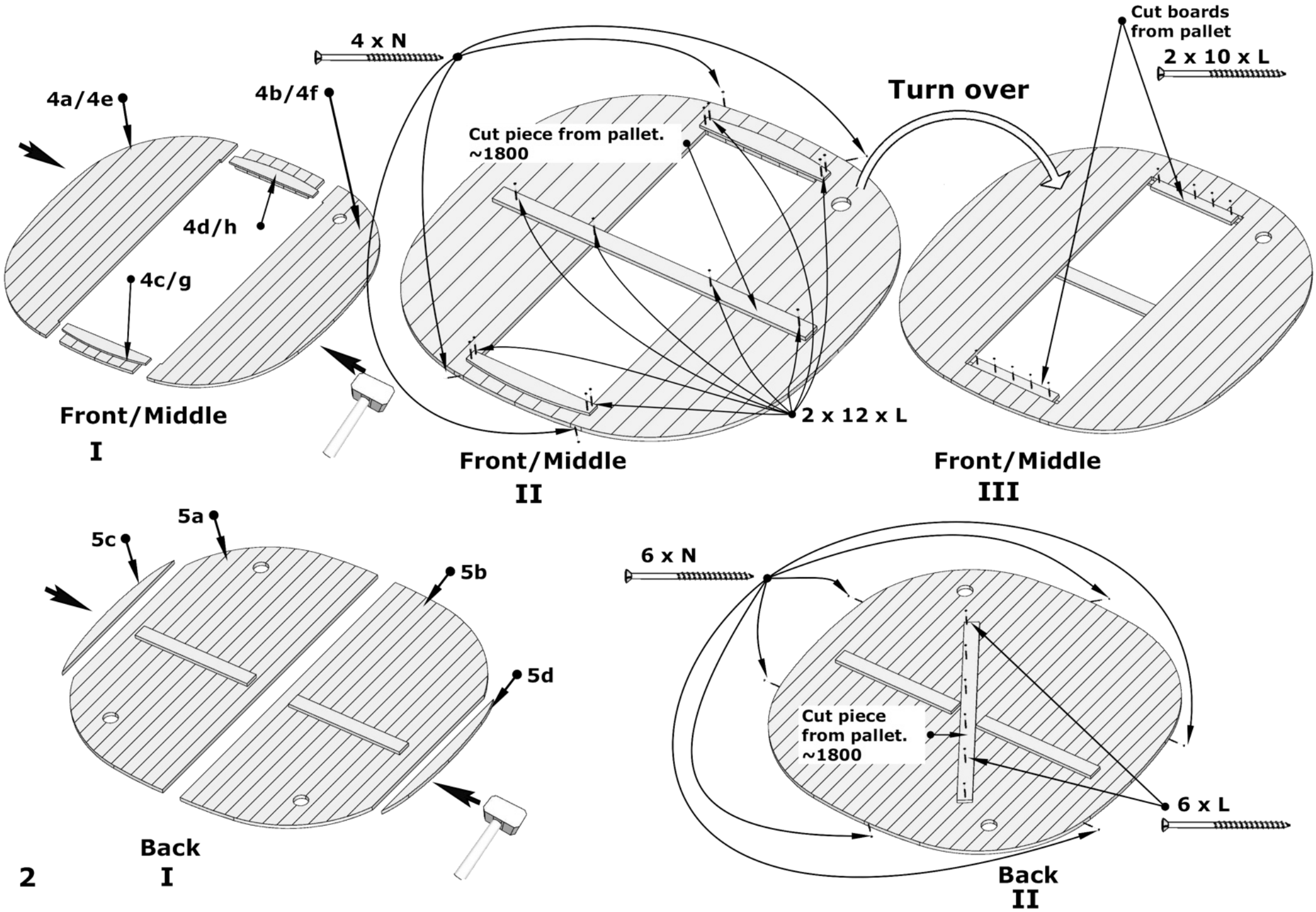
4 x N
4a/4e
4b/4f
4d/h
4c/g
Front/Middle
I
Cut piece from pallet.
~1800
2 x 12 x L
Front/Middle
II
Turn over
Cut boards
from pallet
2 x 10 x L
Front/Middle
III
5a
5c
5b
5d
Back
I
6 x N
Cut piece
from pallet.
~1800
6 x L
Back
II

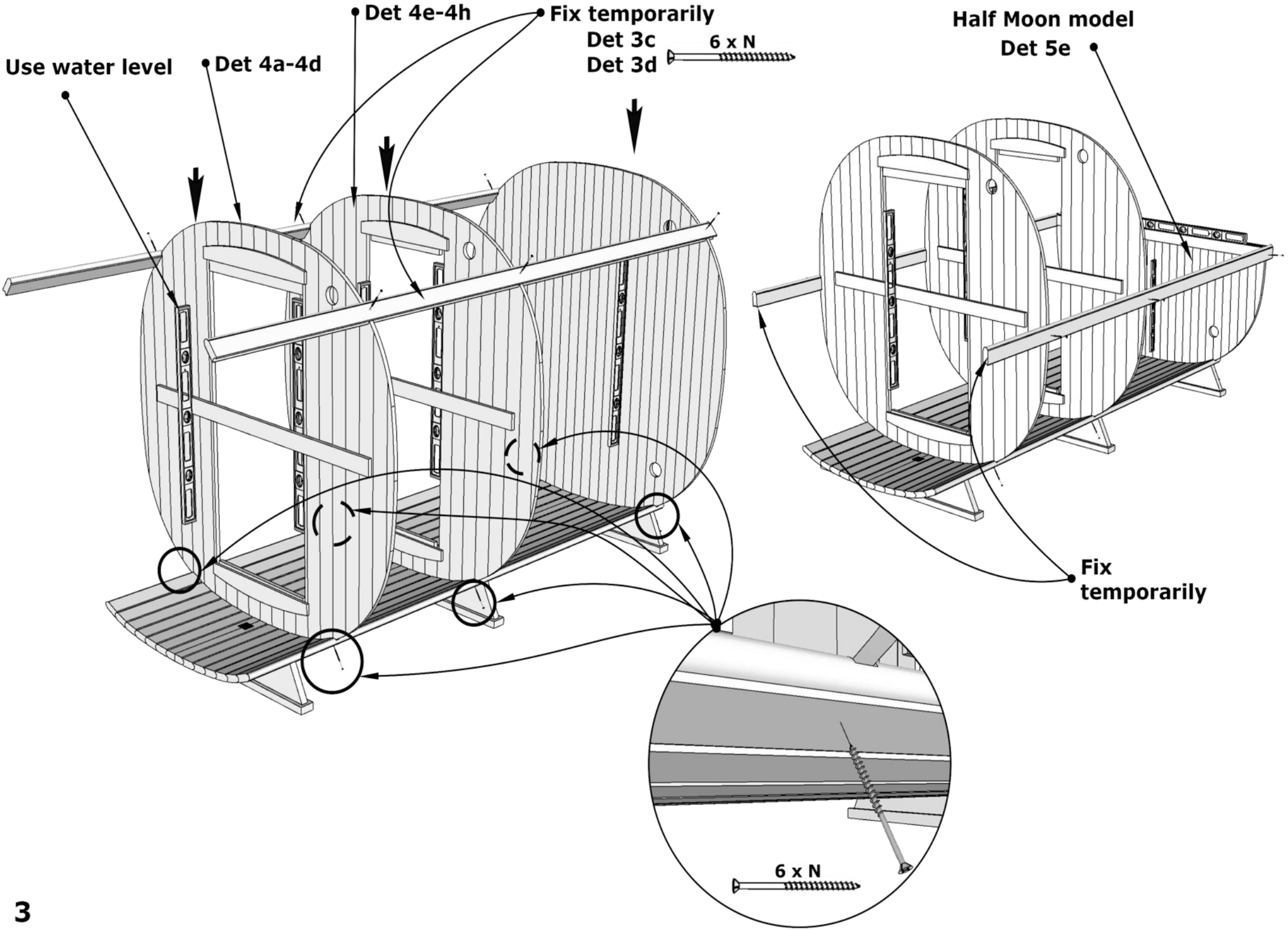
Use water level
Det 4a-4d
Det 4e-4h
Fix temporarily
Det 3c
Det 3d
6 x N
Half Moon model
Det 5e
Fix
temporarily
6 x N

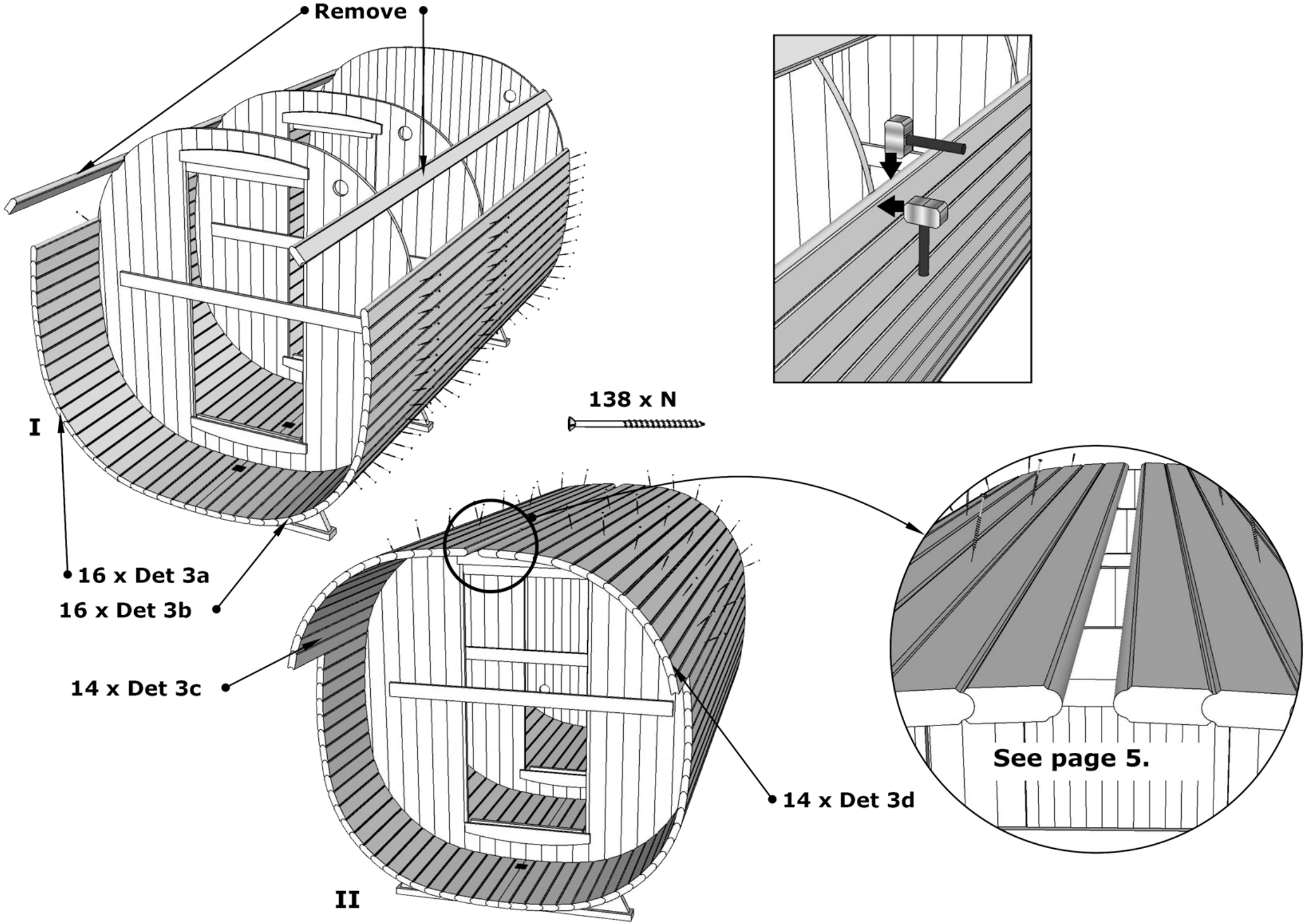
Remove
138 x N
I
16 x Det 3a
16 x Det 3b
14 x Det 3c
14 x Det 3d
See page 5.
II

Half Moon model

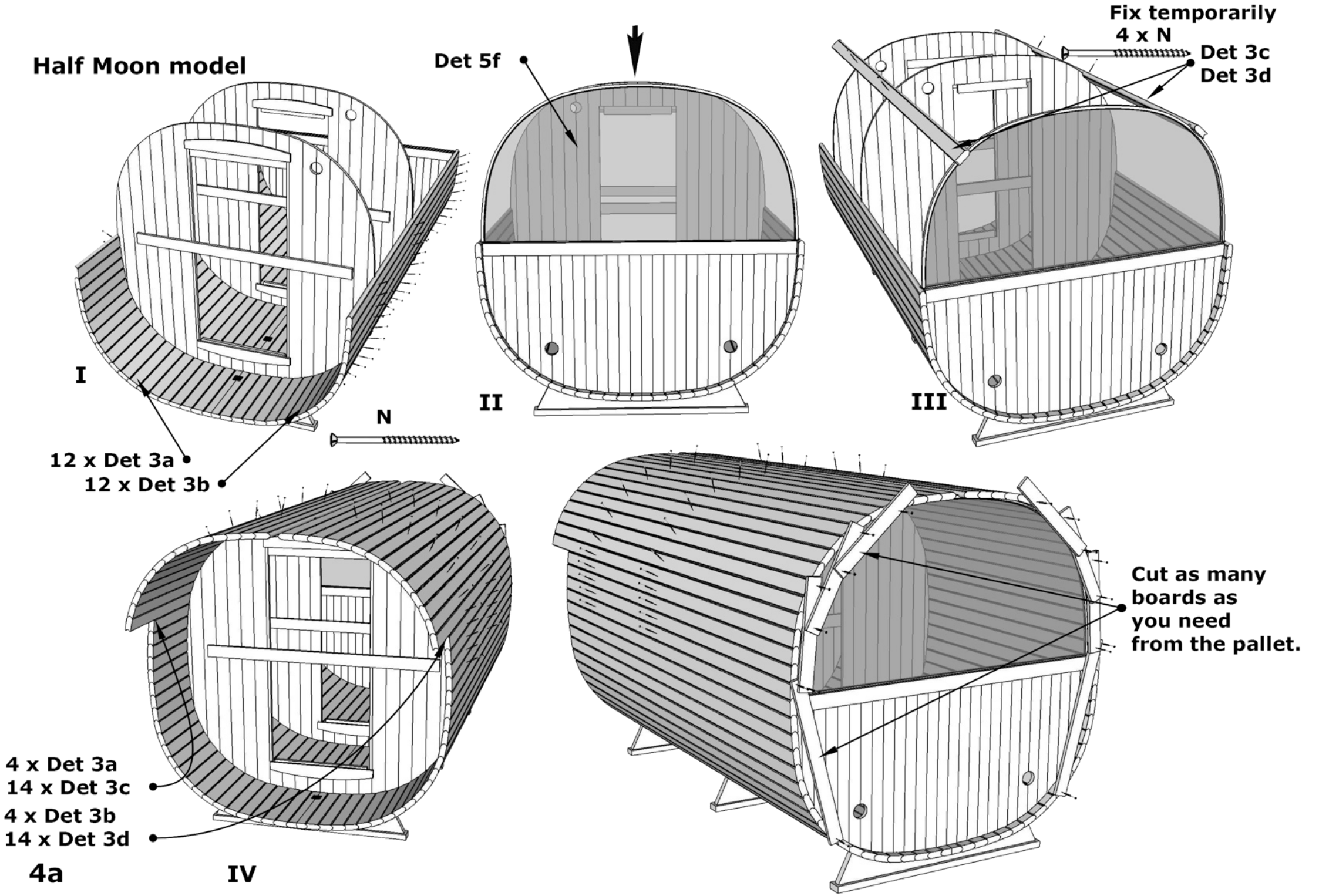

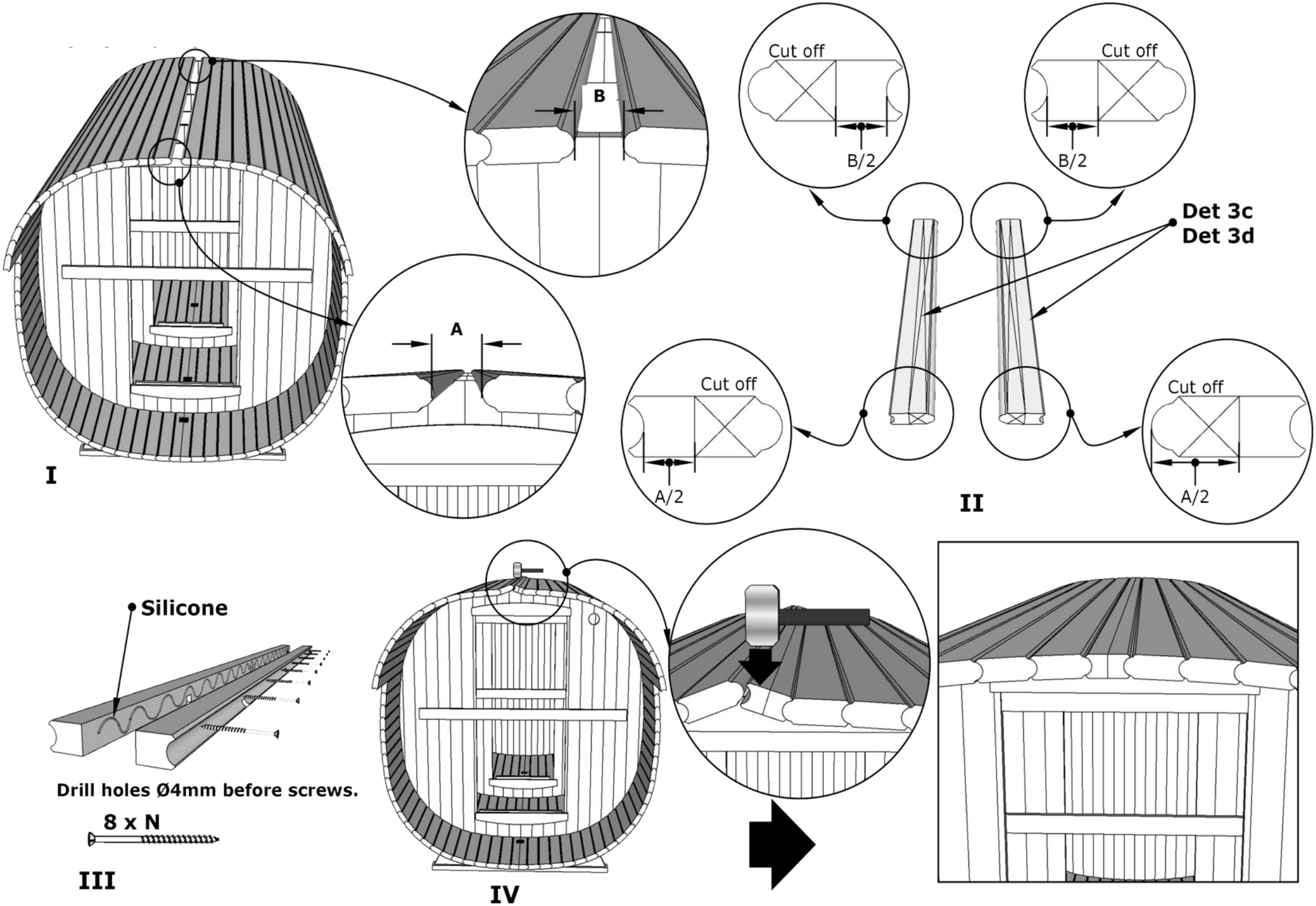
B
A
I
Cut off
B/2
Cut off
B/2
Det 3c
Det 3d
Cut off
A/2
Cut off
A/2
II
Silicone
Drill holes Ø4mm before screws.
8 x N
III
IV

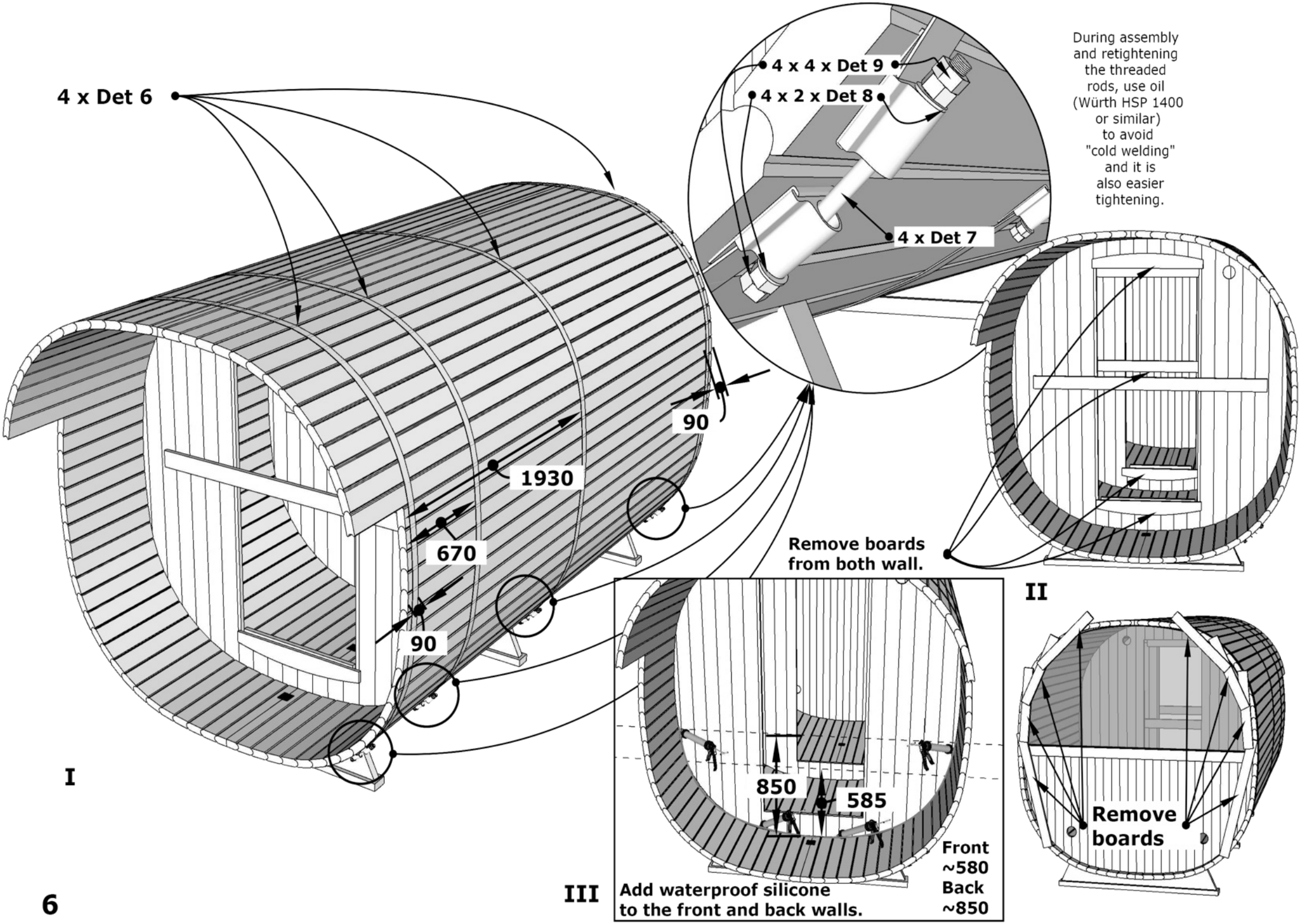
4 x Det 6
4 x 4 x Det 9
4 x 2 x Det 8
4 x Det 7
During assembly and retightening the threaded rods, use oil (Würth HSP 1400 or similar) to avoid "cold welding" and it is also easier tightening.
90
1930
670
90
Remove boards from both wall.
II
I
850
585
Front ~580
Back ~850
Add waterproof silicone to the front and back walls.
III
Remove boards

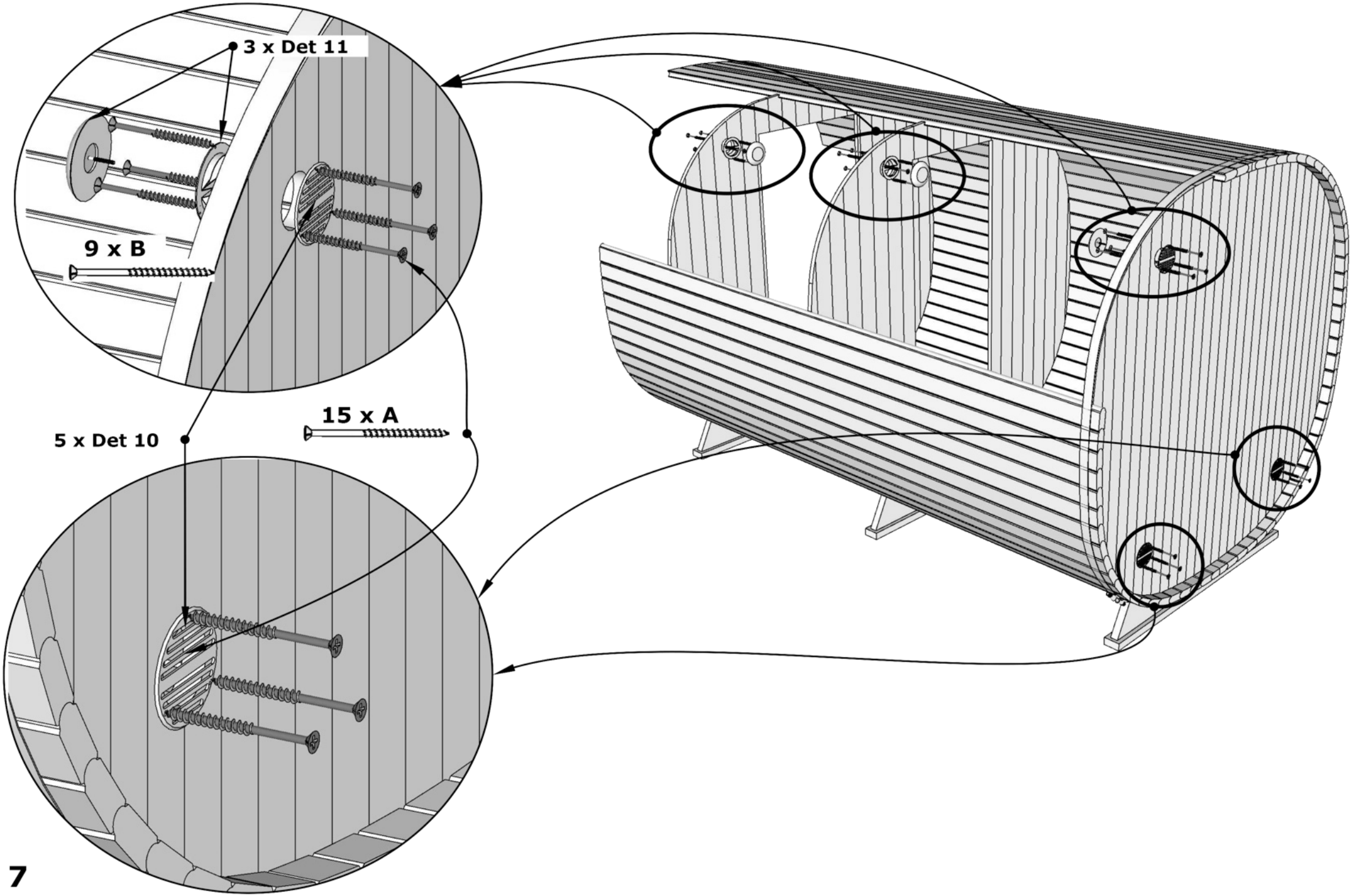
3 x Det 11
9 x B
15 x A
5 x Det 10

Model with a wood burning heater.

Mark the chimney opening.

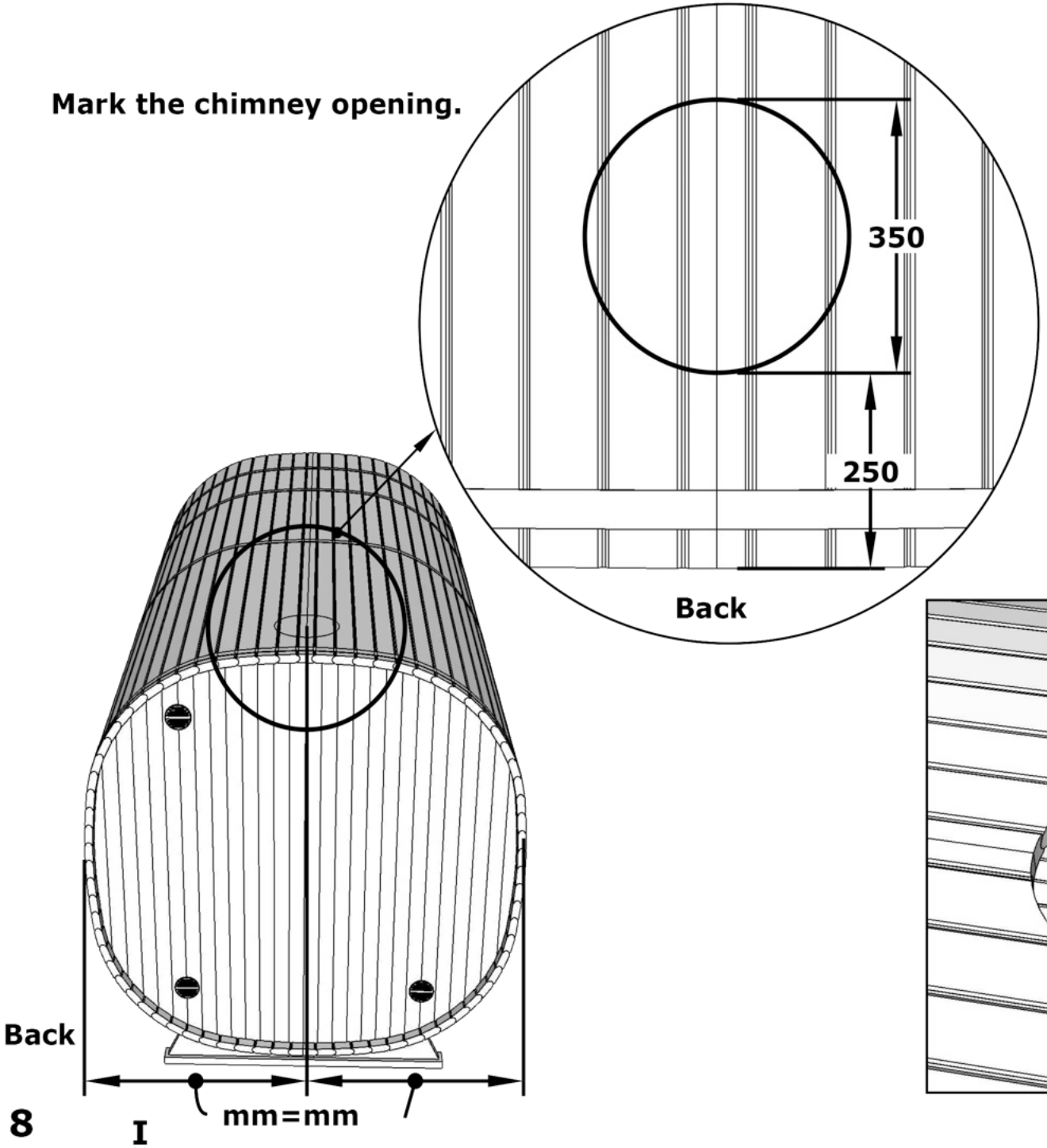

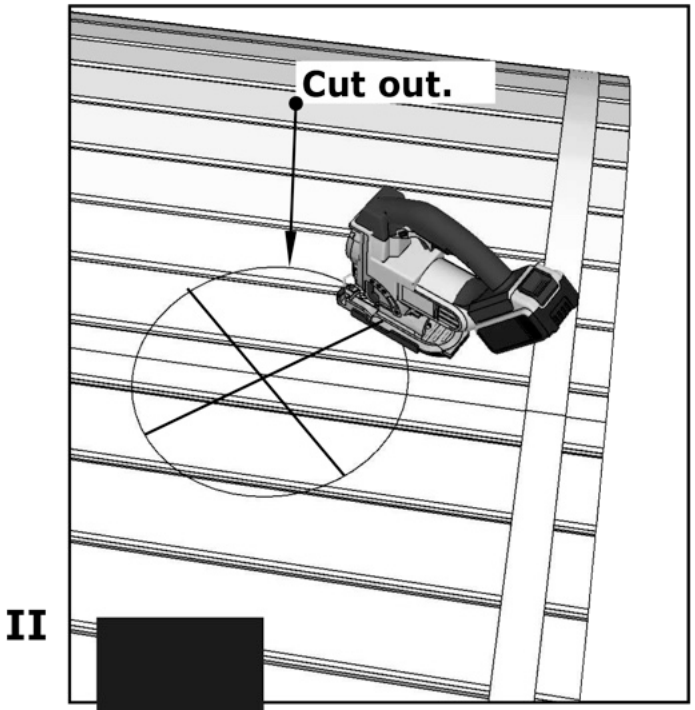

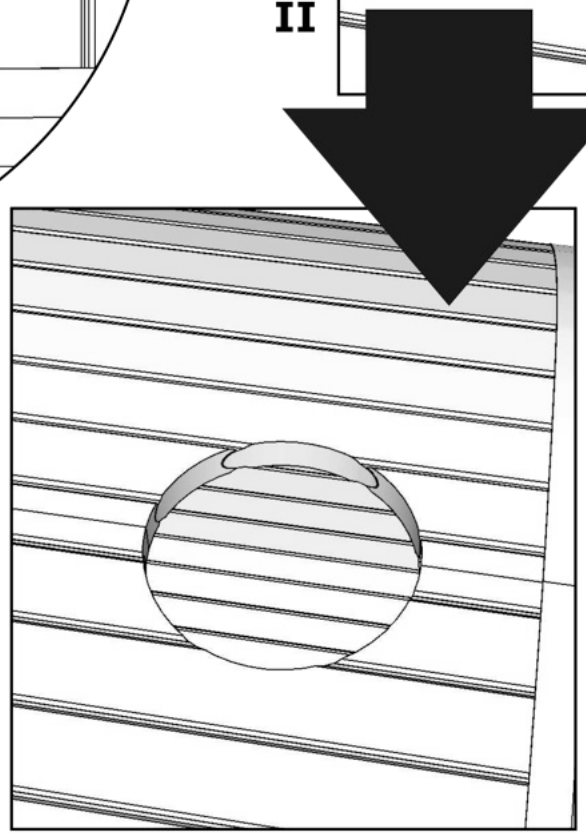

Clean up the sawdust.

III

(Windows are optional)

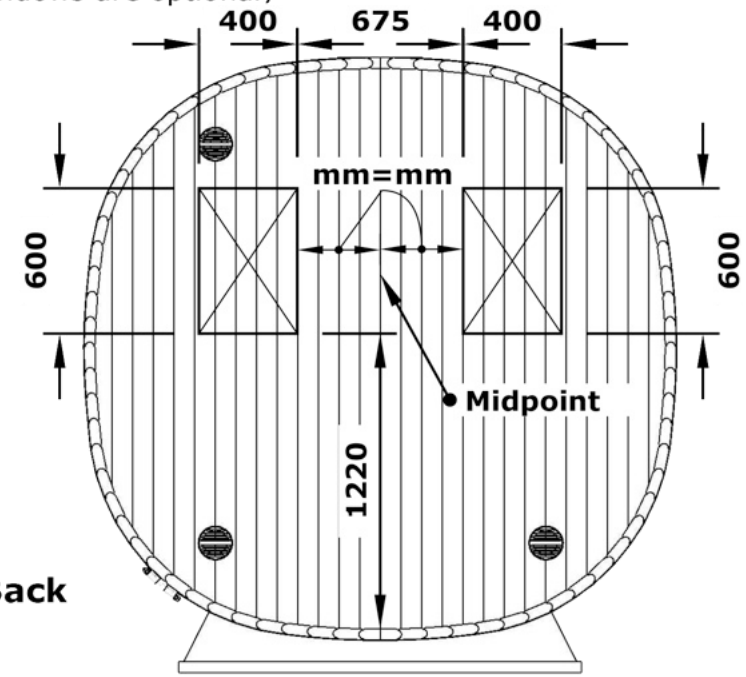

Mark the window openings and cut them out.

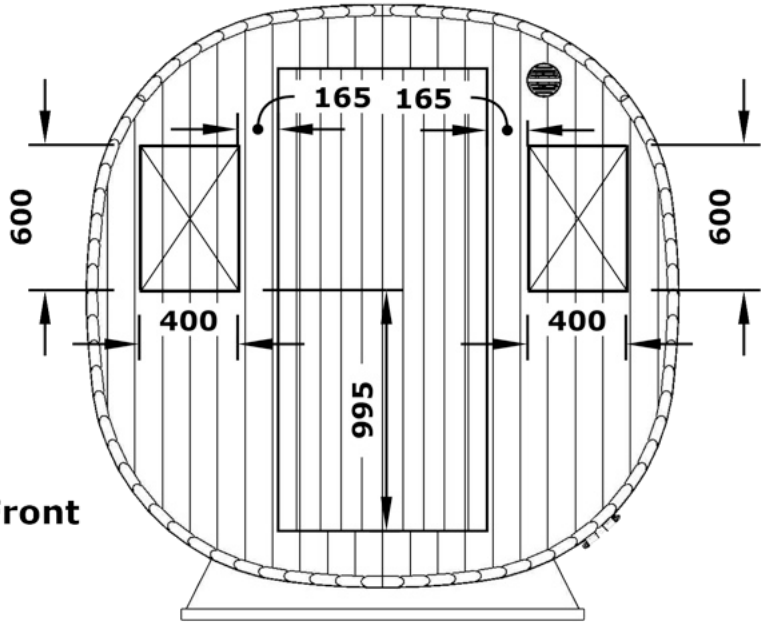

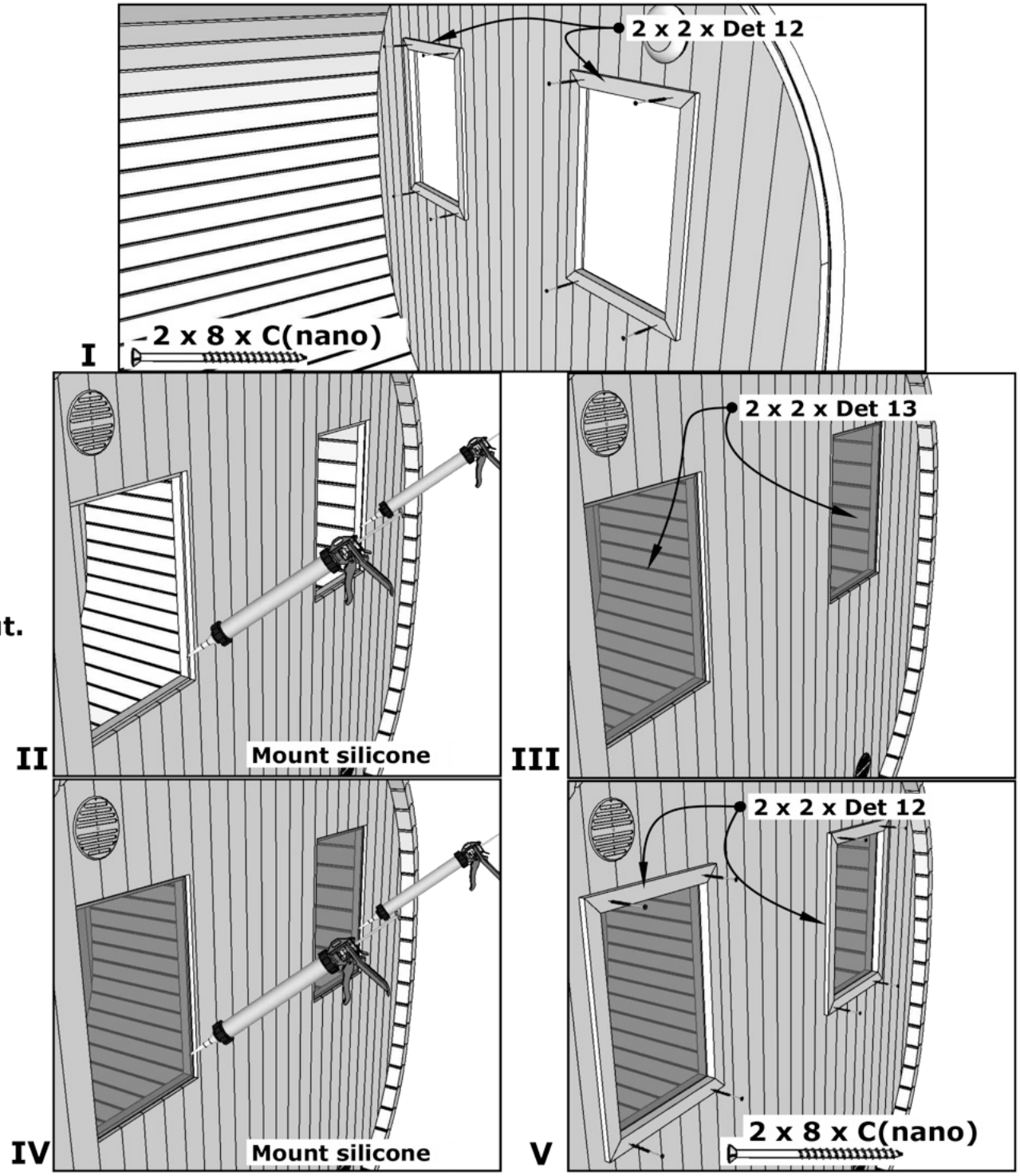

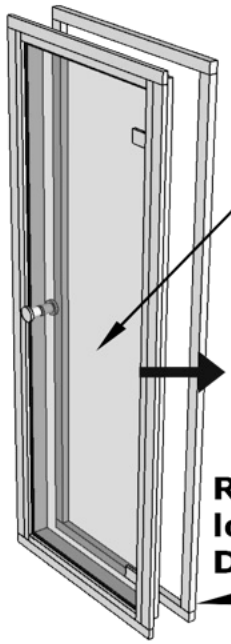

I

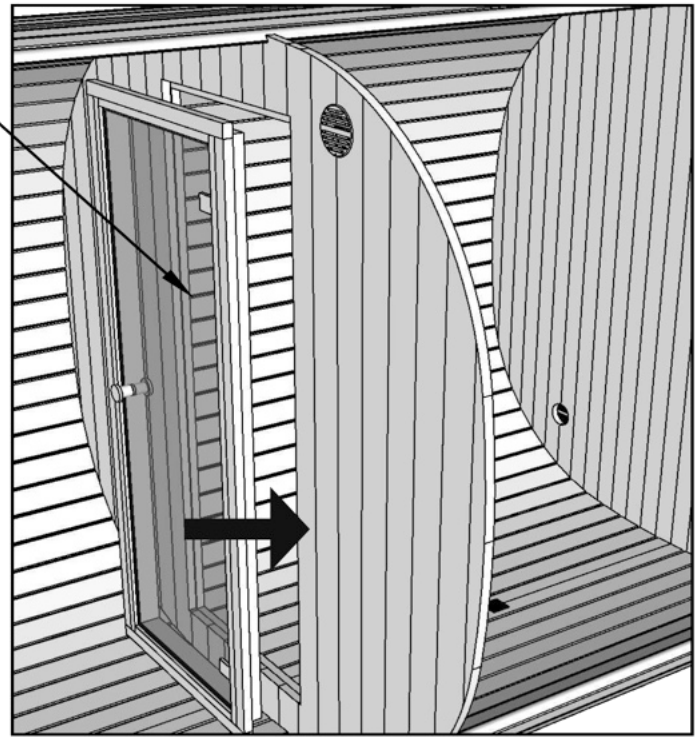

II

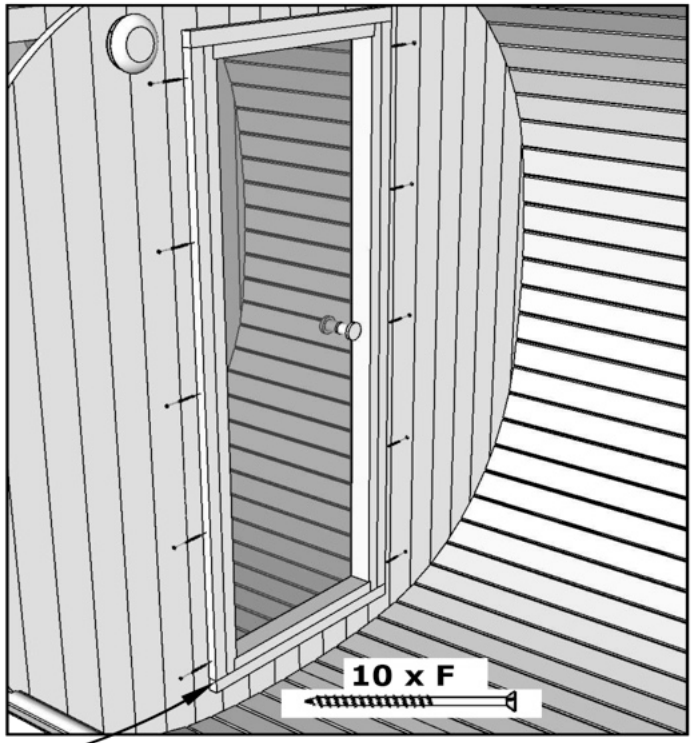

III

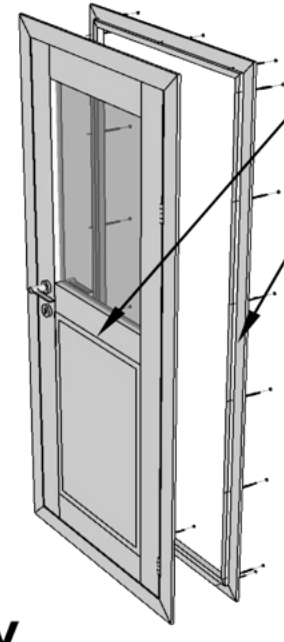

IV

Remove one frame.
Don`t unscrew the
screws completely.

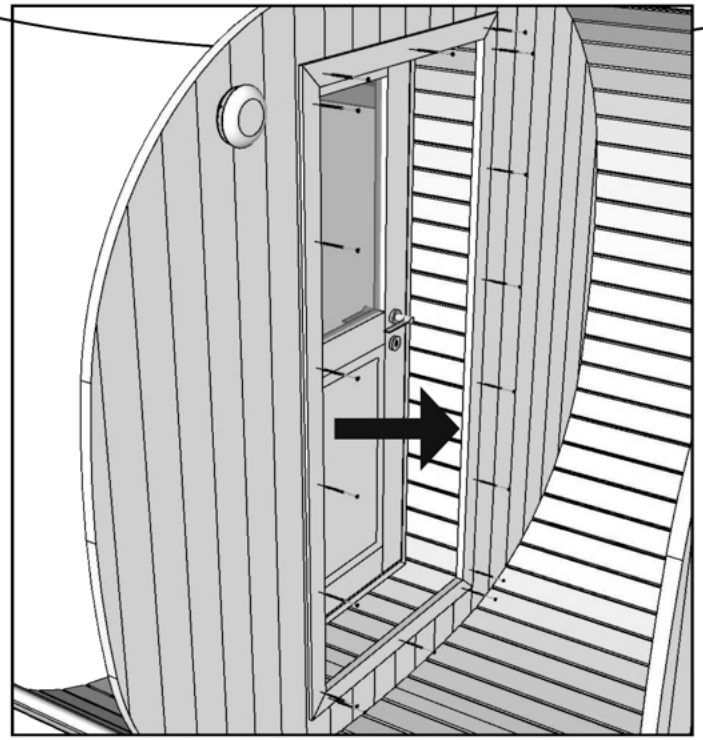

V

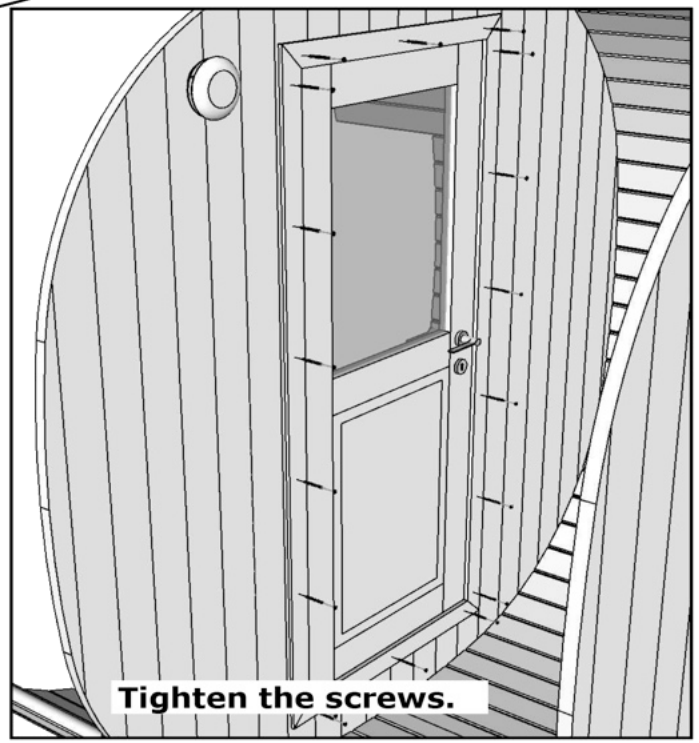

VI

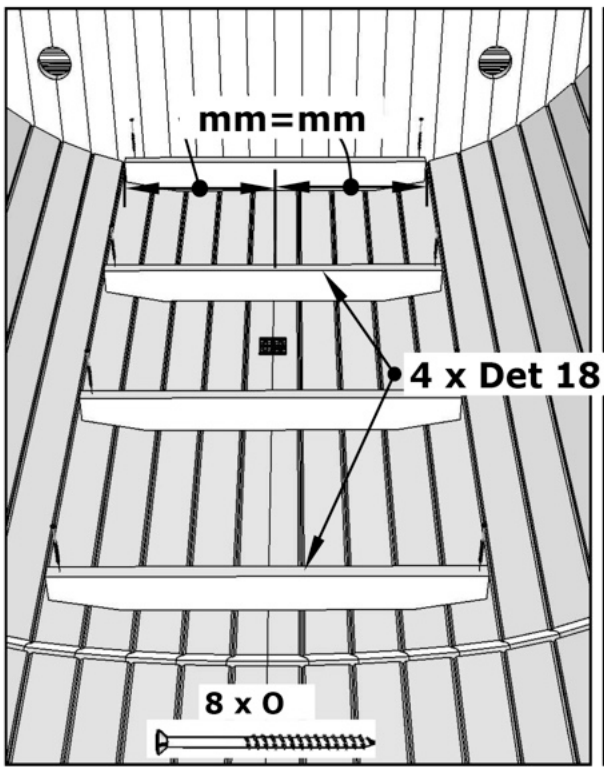
mm=mm
4 x Det 18
8 x O

I

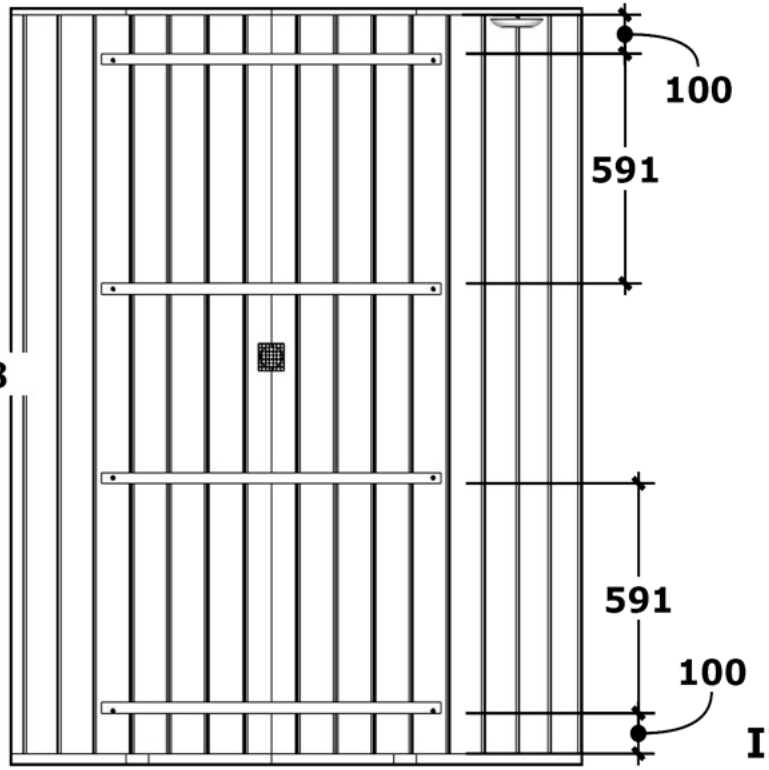
100
591
591
100

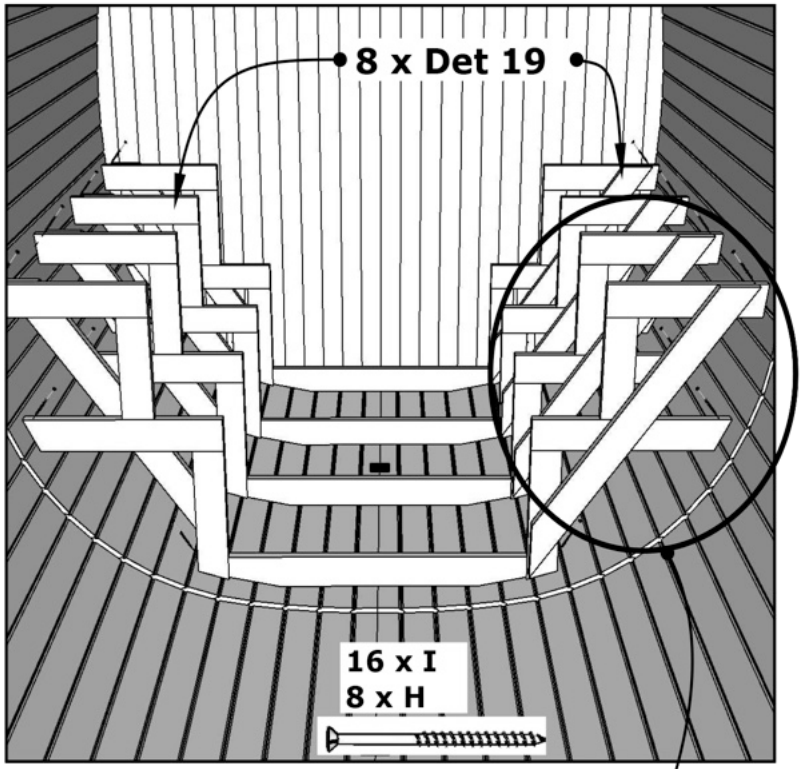
8 x Det 19
16 x I
8 x H

II

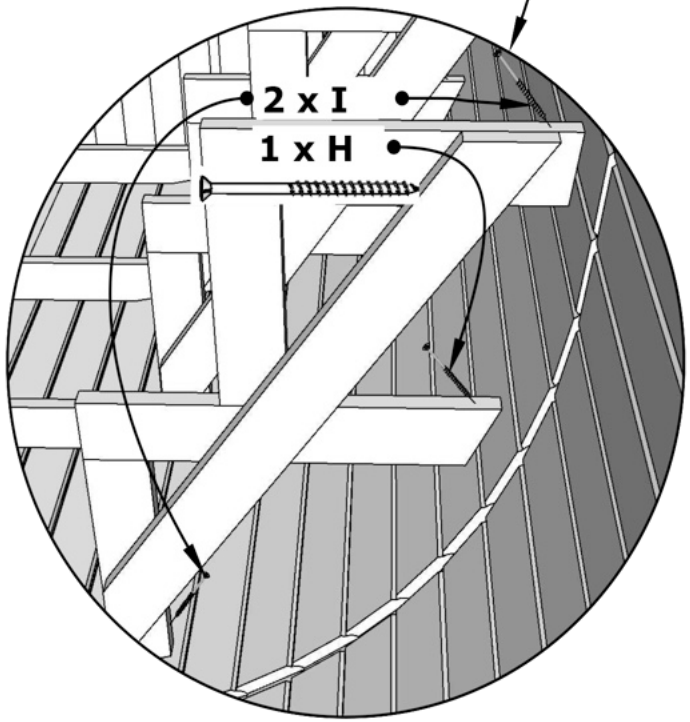
2 x I
1 x H

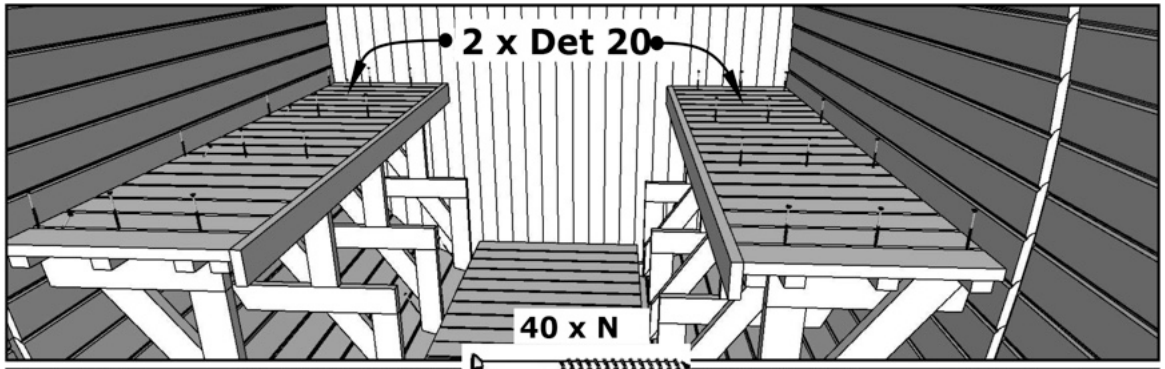
2 x Det 20
40 x N

III

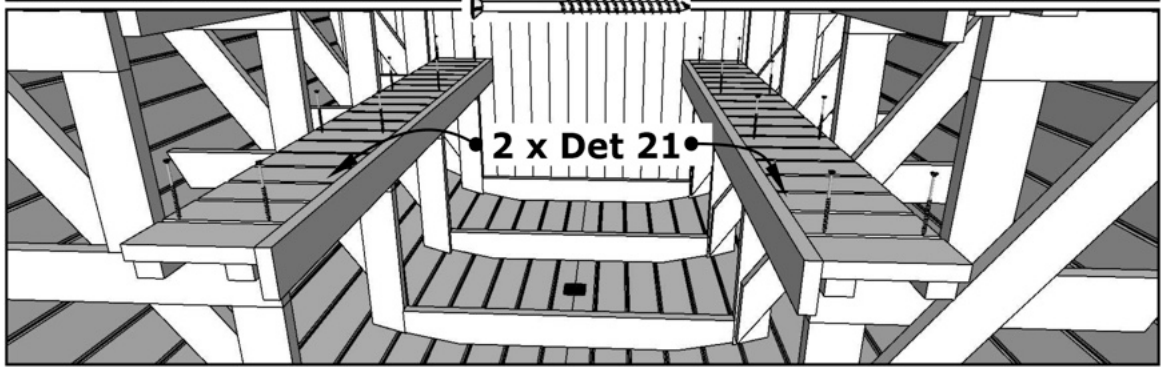
2 x Det 21

IV

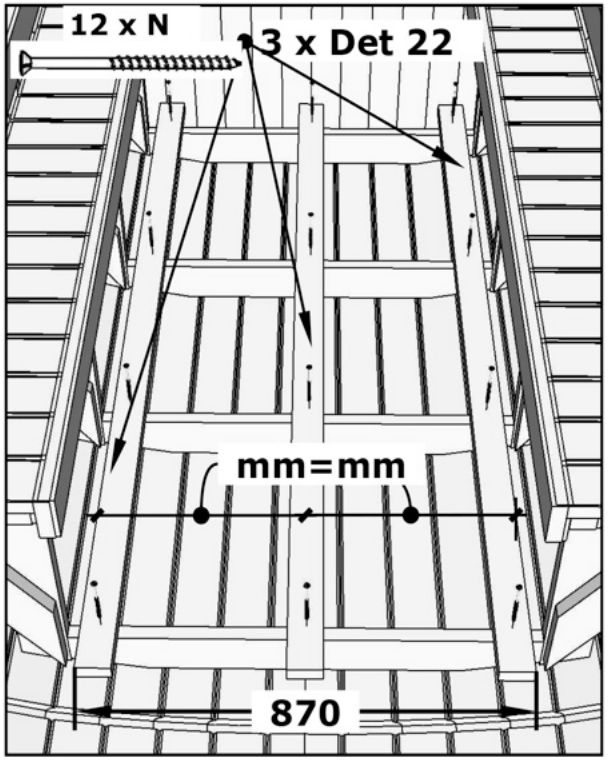

I

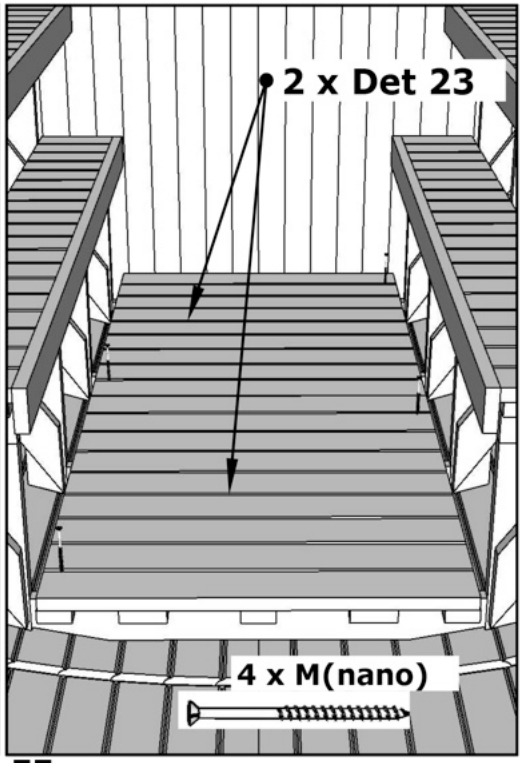

II

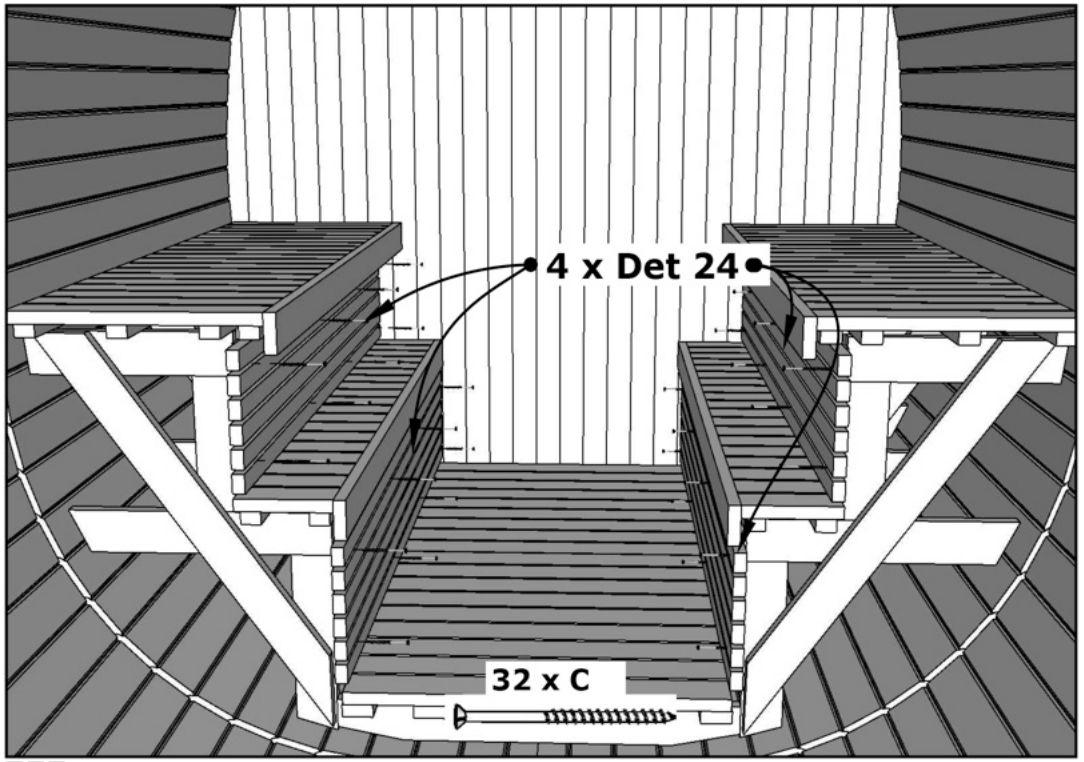

III

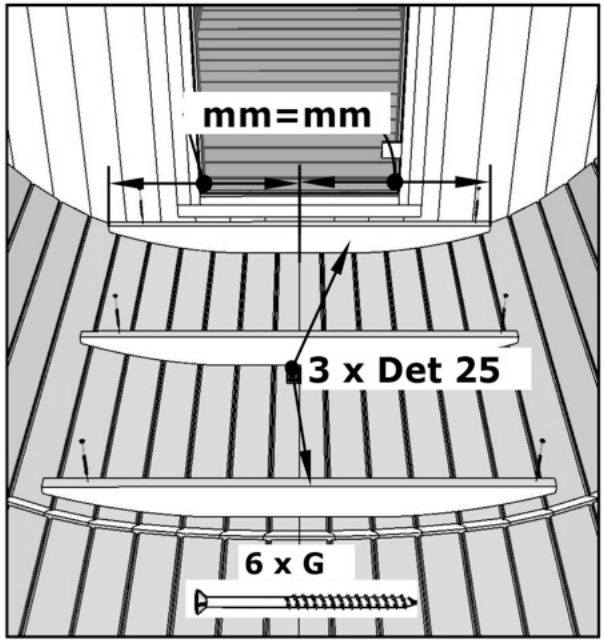

IV

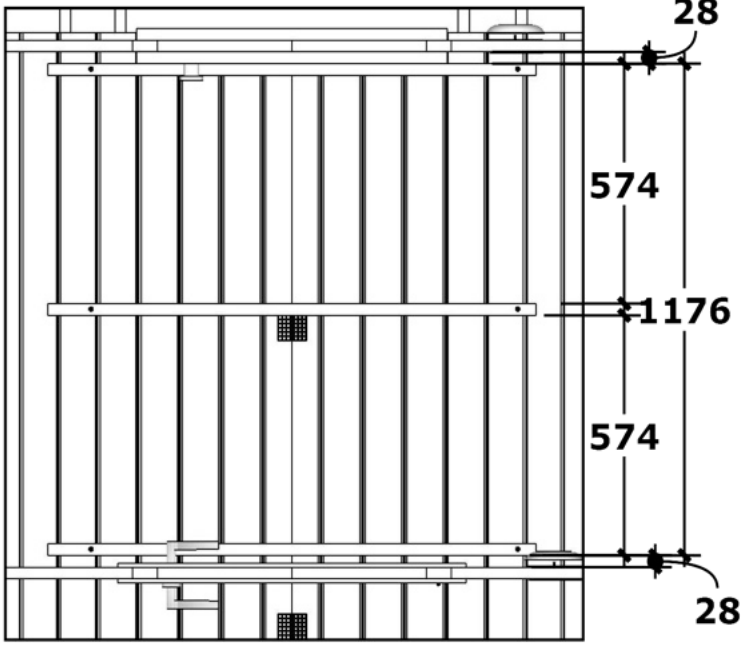

V

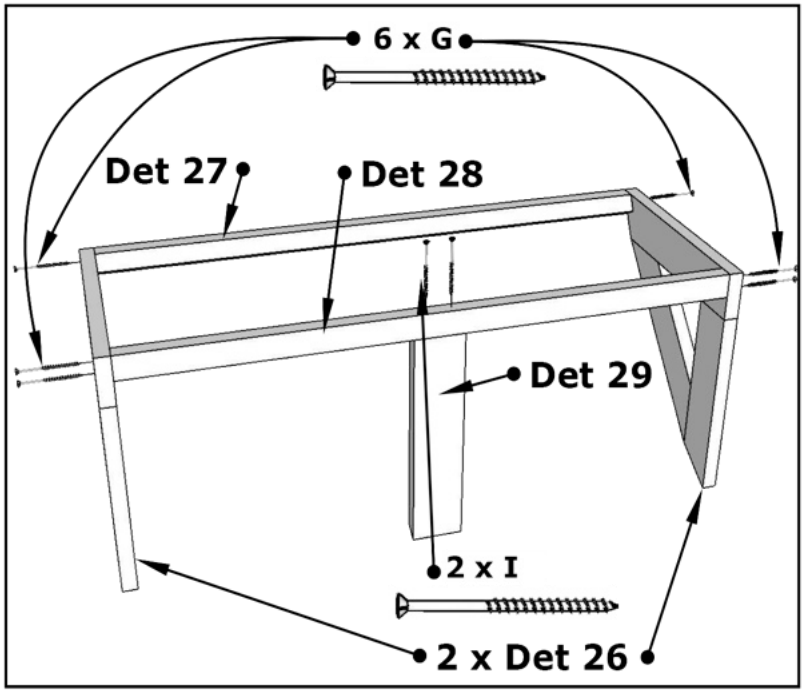

VI x2

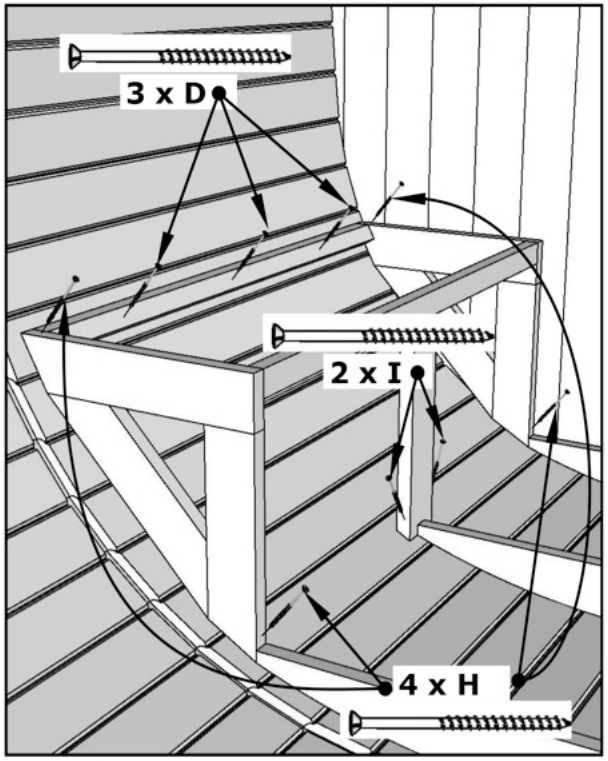

I x2

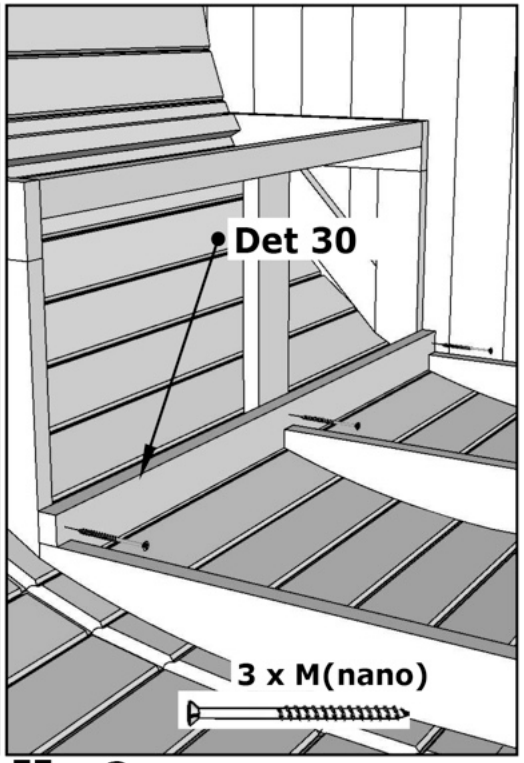

II x2

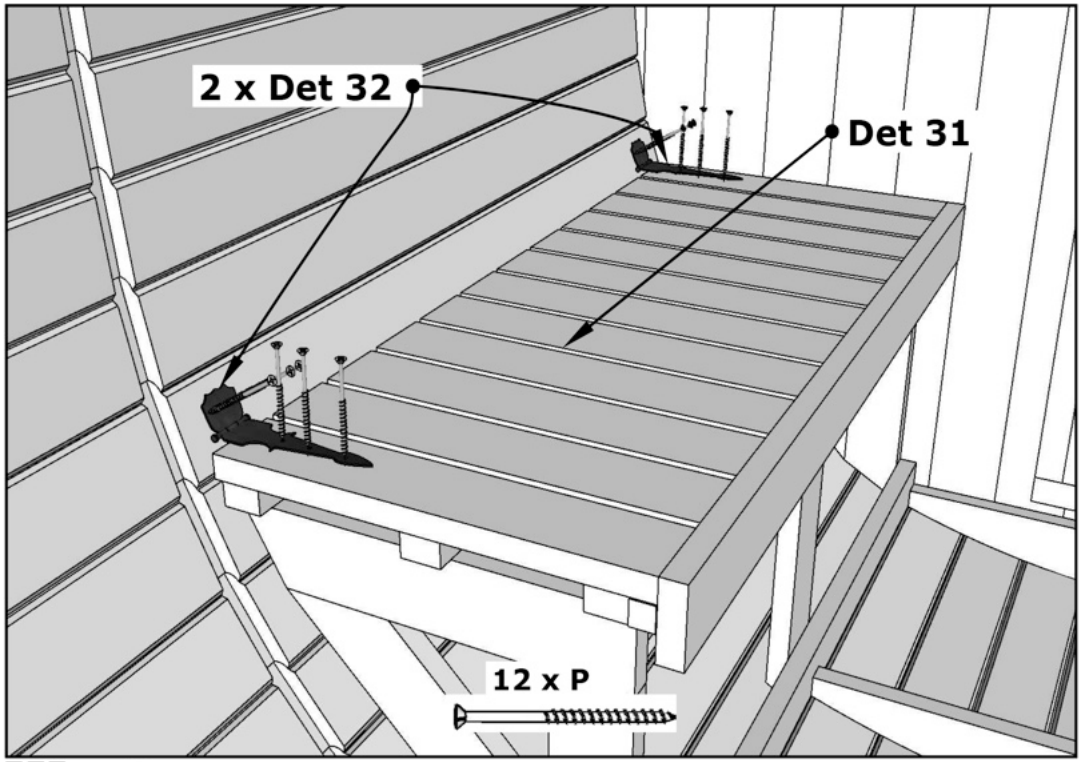

III x2

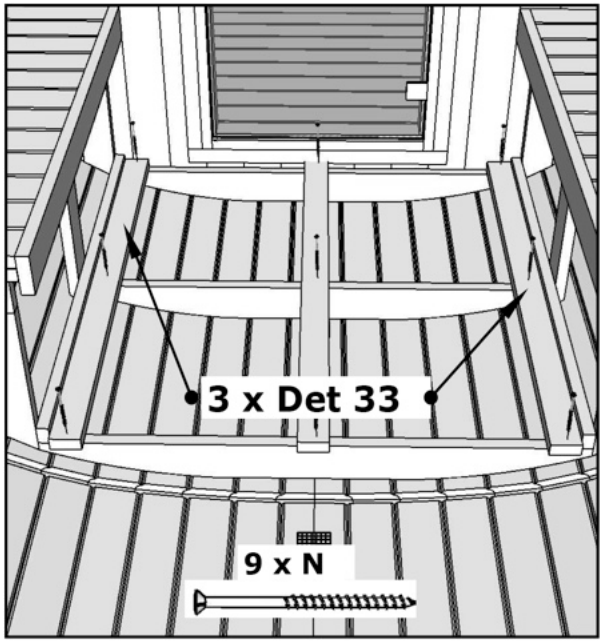

IV

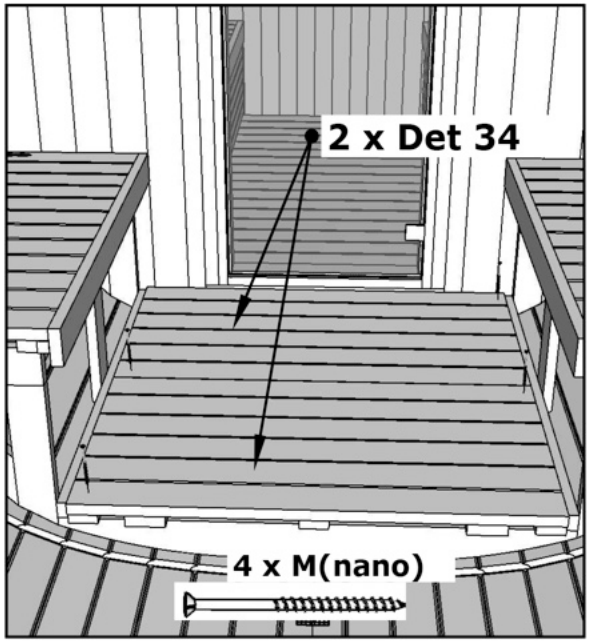

V

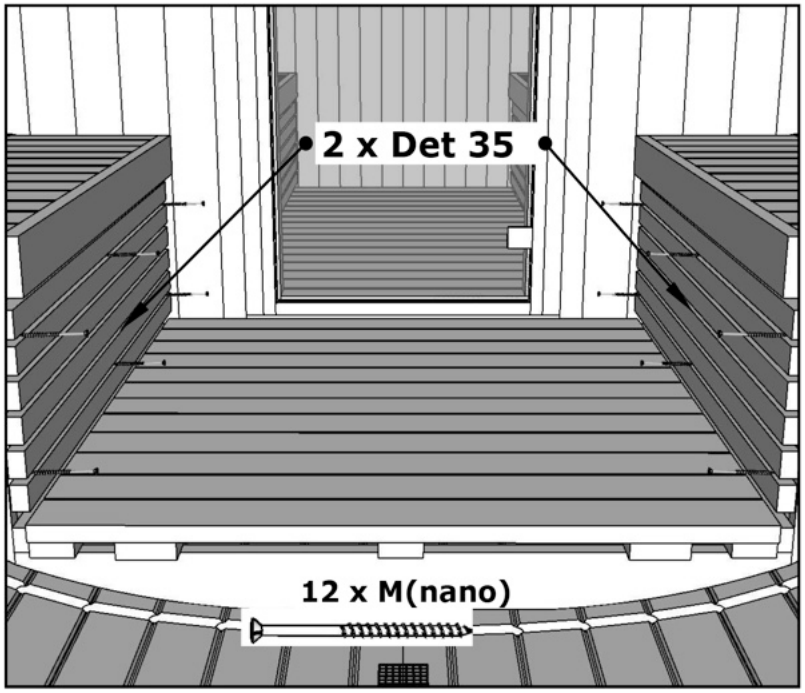

VI

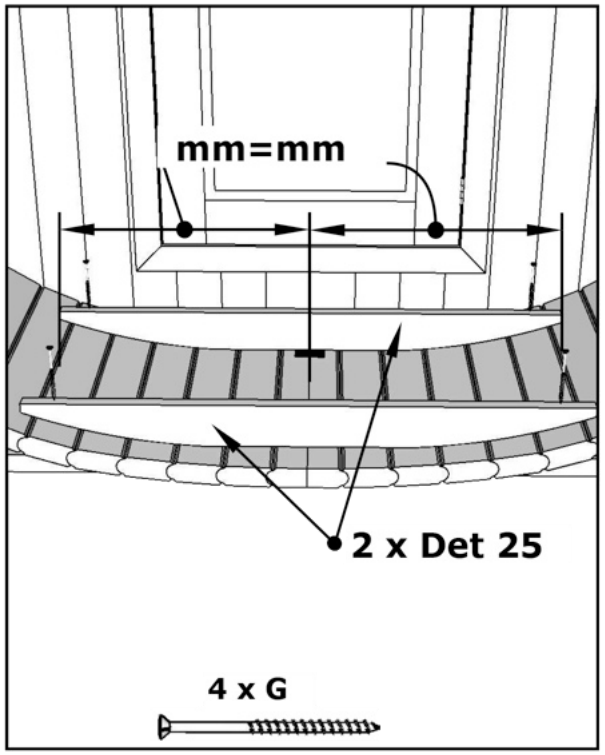
mm=mm
2 x Det 25
4 x G

I

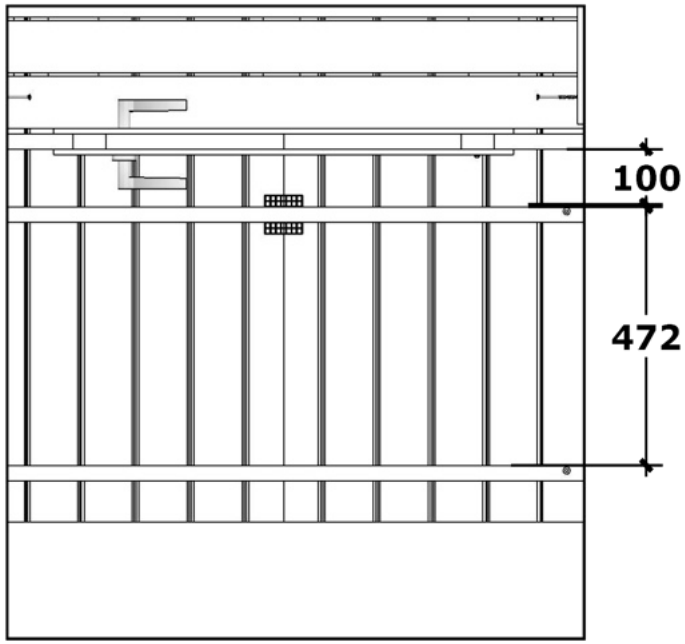
100
472

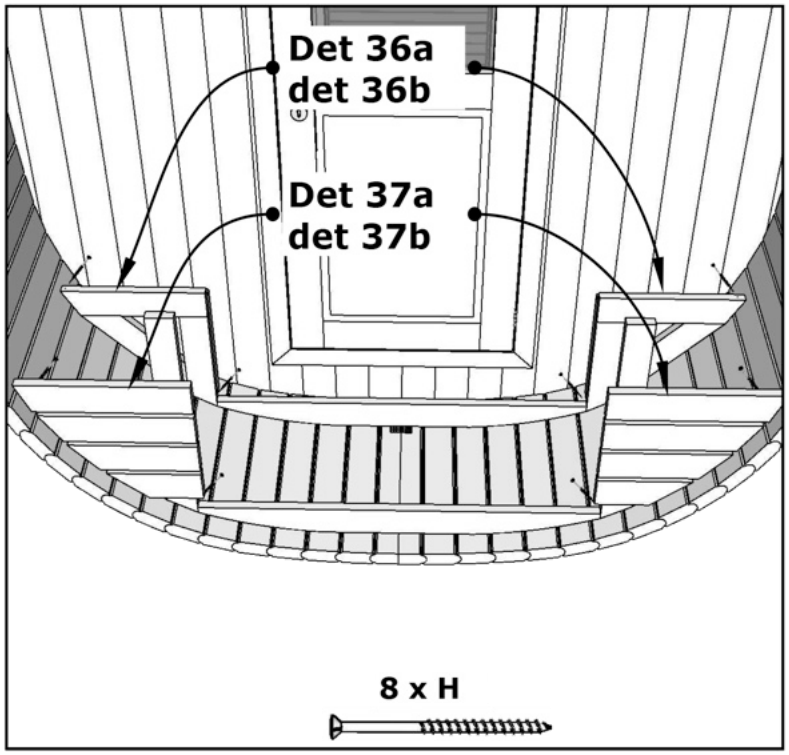
Det 36a
det 36b
Det 37a
det 37b
8 x H

II

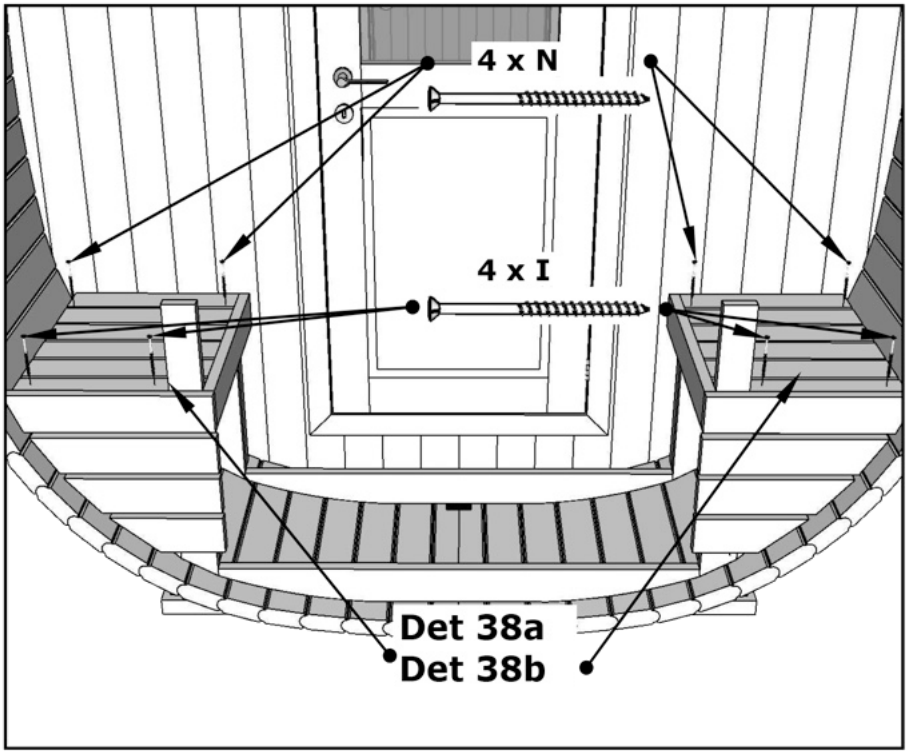
4 x N
4 x I
Det 38a
Det 38b

III

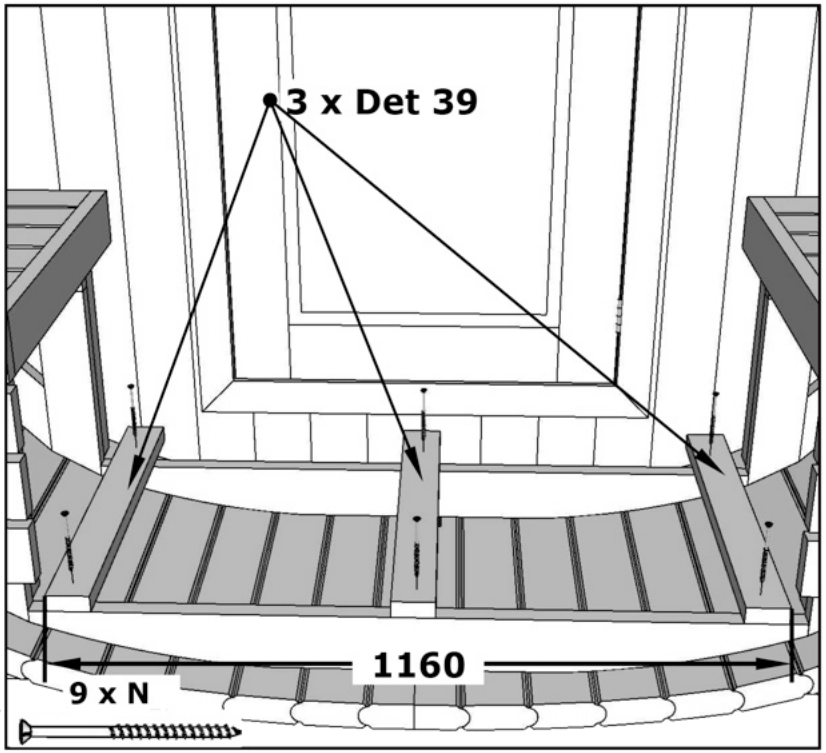
3 x Det 39
1160
9 x N

IV

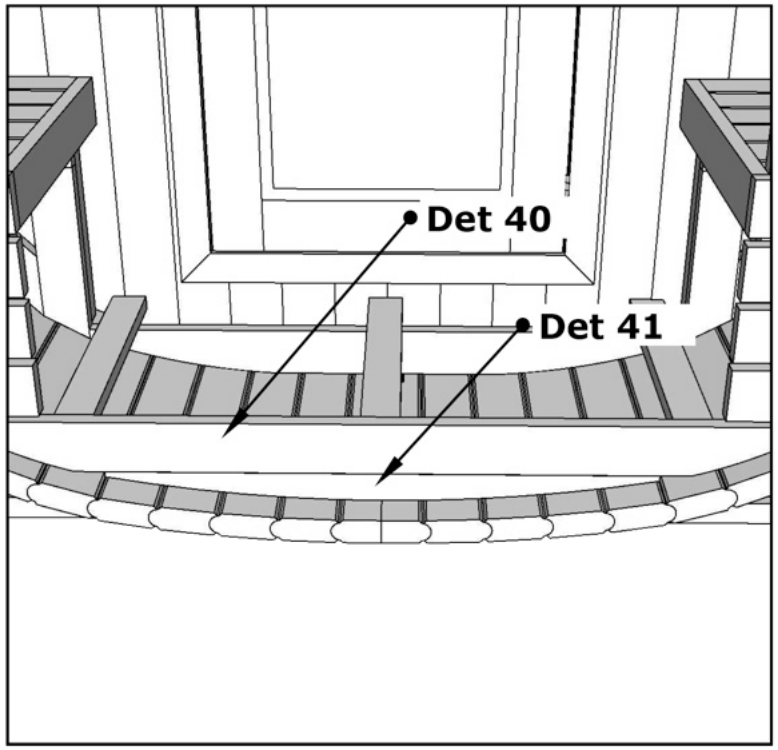

I

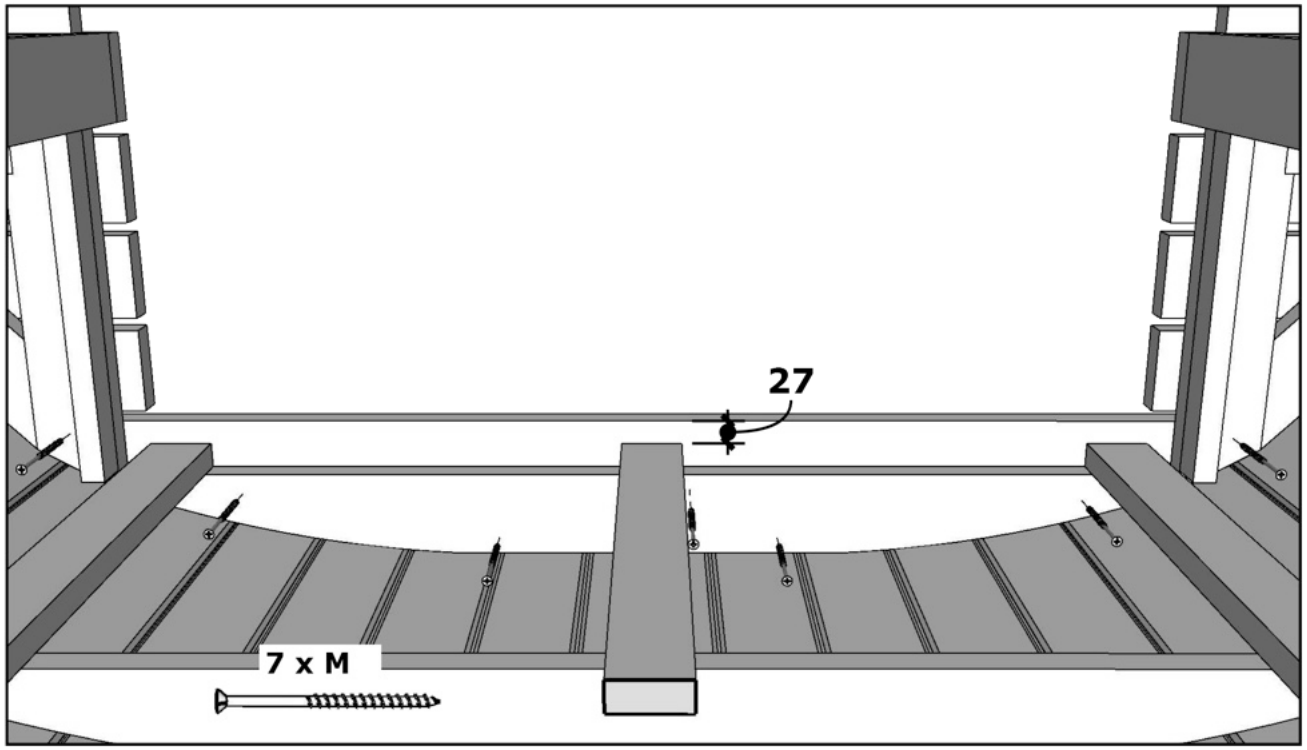

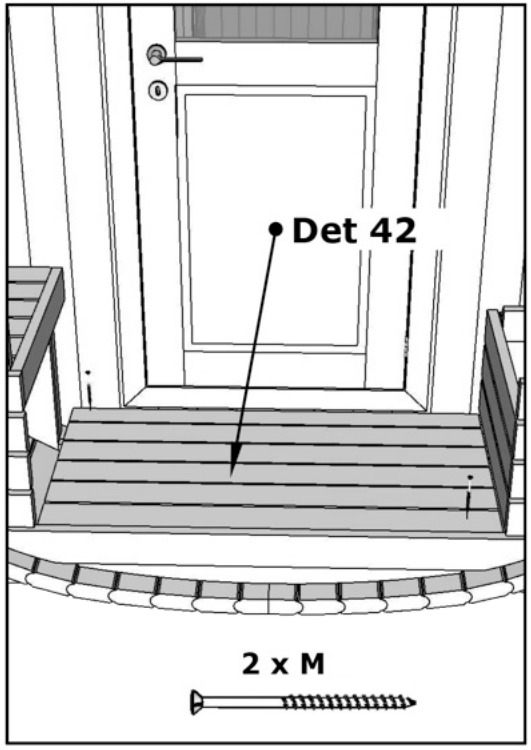

II

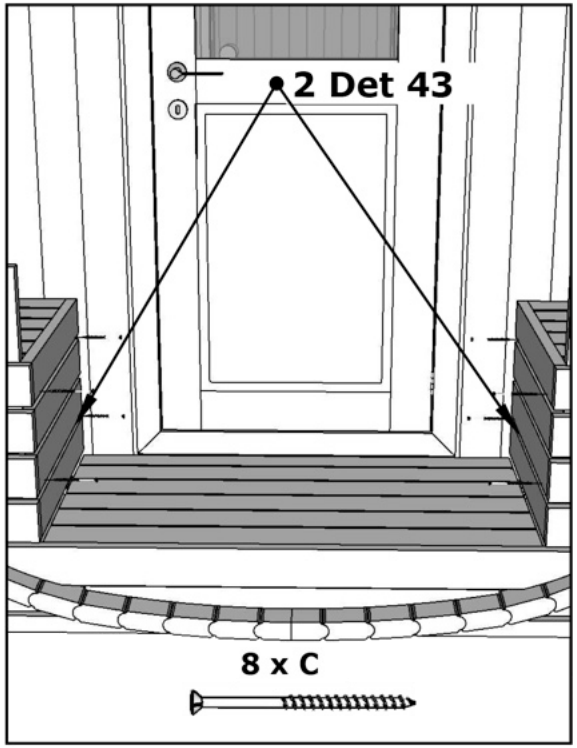

III

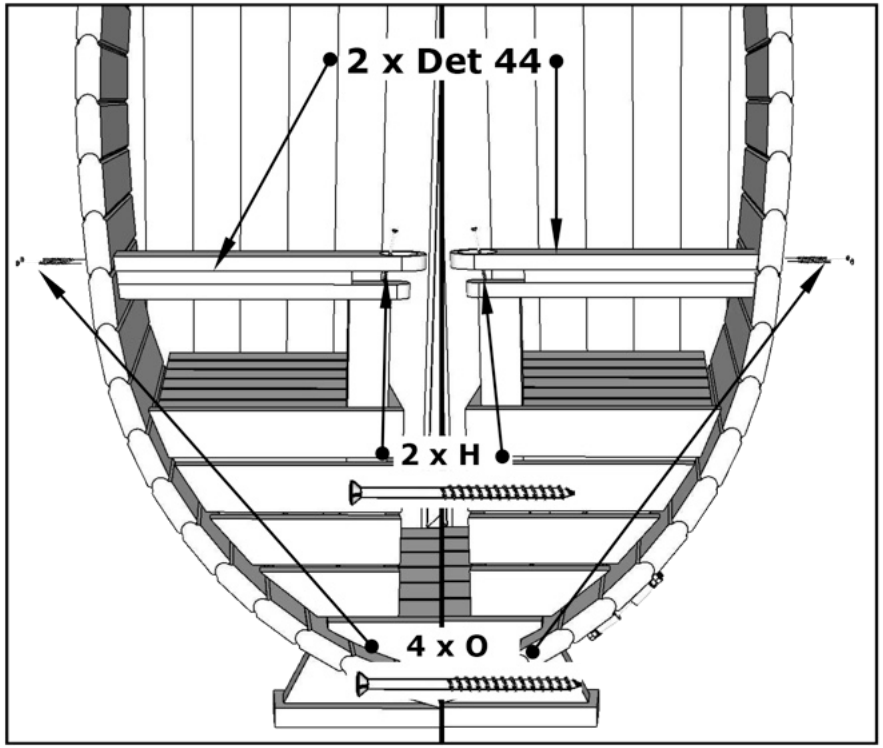

IV

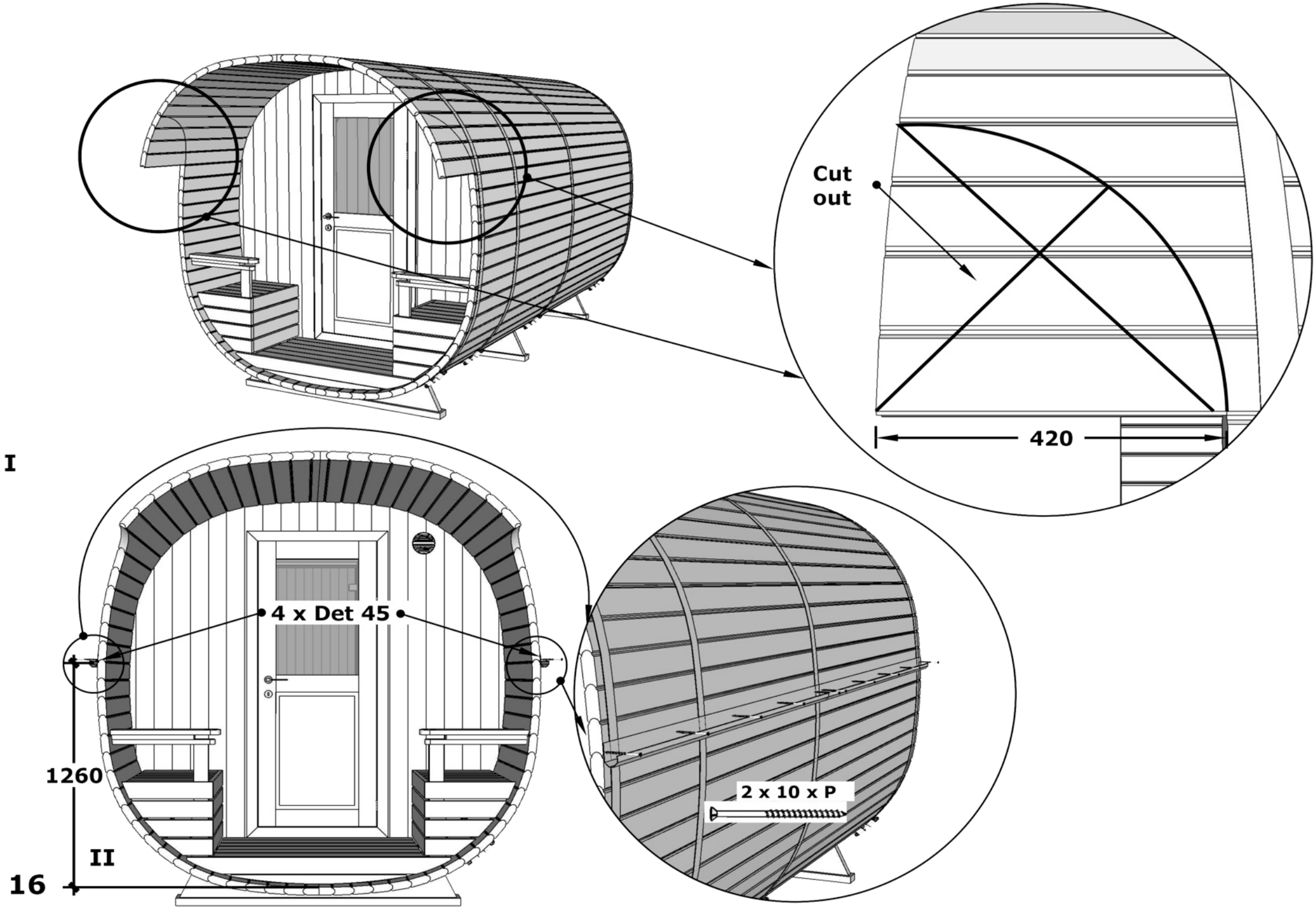
Cut
out
420
I
4 x Det 45
1260
2 x 10 x P
II
16

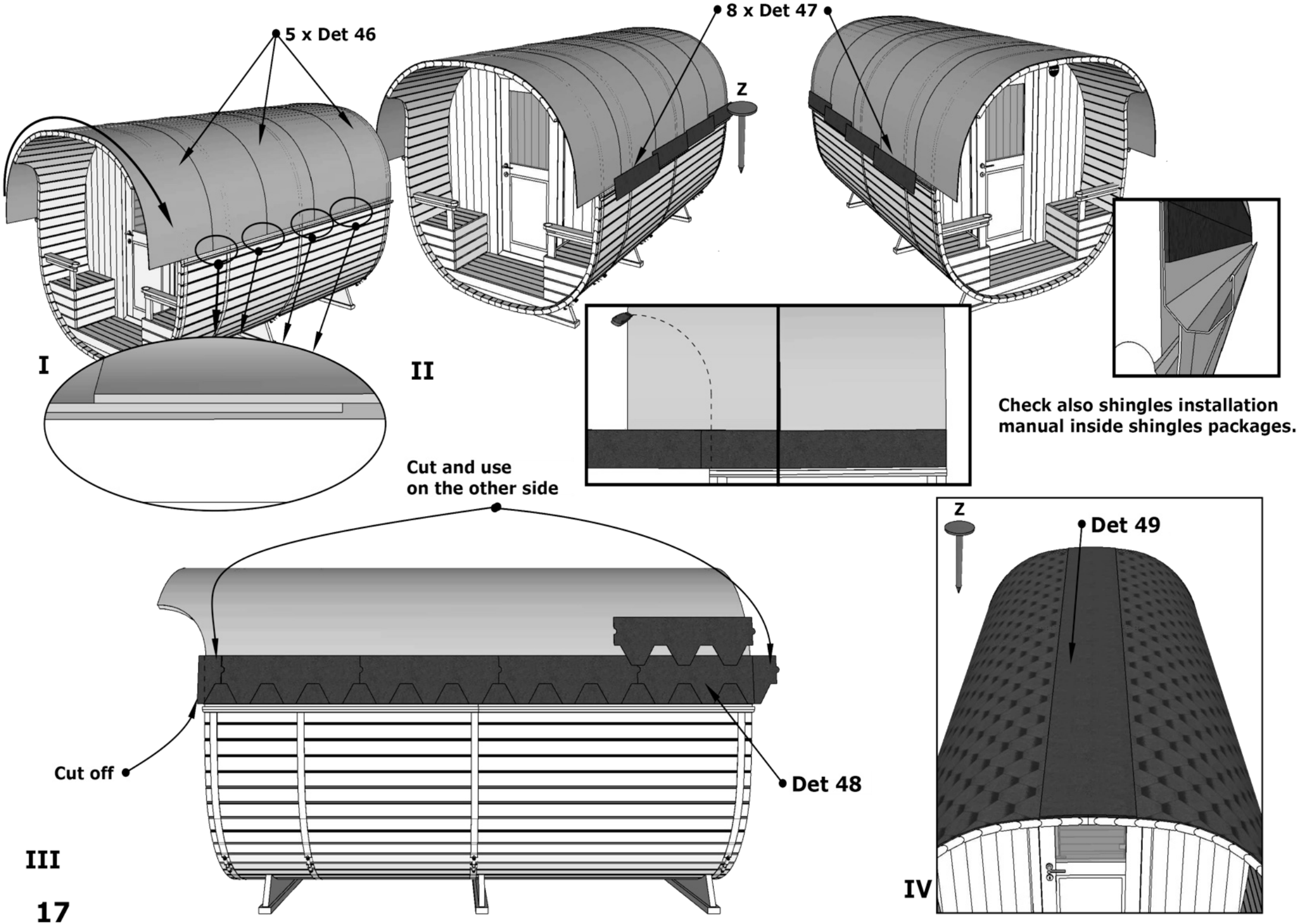
5 x Det 46
8 x Det 47
Z
I
II
Check also shingles installation manual inside shingles packages.
Cut and use on the other side
Cut off
Det 48
III
Z
Det 49
IV